GT-C2004A-YFSEDY

Display Solutions	20 x 4 Character LCD, Y-G STN, Positive Transflective, Y-G LED Backlight

CONTENTS

FUNCTIONS & FEATURES ---------- 3

BLOCK DIAGRAM ---------- 3

MODULE OUTLINE DRAWING ---------- 4

INTERFACE PIN FUNCTIONS ---------- 5

ABSOLUTE MAXIMUM RATINGS (Ta = 25℃) ---------- 5

DC ELECTRICAL CHARACTERISTICS ---------- 5

LED BACKLIGHT CHARACTERISTICS ---------- 5

CONNECTION WITH MCU ---------- 6

TYPICAL V0 CONNECTIONS FOR DISPLAY CONTRAST ---------- 7

MPU INTERFACE 4-Bit/8-Bit ---------- 7

AC CHARACTERISTICS ---------- 8

OPTICAL CHARACTERISTICS ---------- 10

COMMAND TABLE ---------- 12

RESET FUNCTIONS ---------- 13

DISPLAY DATA RAM (DDRAM) ---------- 15

CHARACTER GENERATOR ROM ---------- 16

RELIABILITY TEST CONDITION ---------- 17

PRECAUTION FOR SOLDERING TO THE LCM ---------- 18

PRECAUTION FOR USING LCM MODULE ---------- 18

OTHERS ---------- 19

APPENDIX A: DATE CODE RULES ---------- 19

APPENDIX B: CHANGE NOTES ---------- 19

FUNCTIONS & FEATURES

- Construction : COB(Chip-on-Board)
- Display Format : 20x4 Characters
- Display Type : STN, Transflective, Positive, Y-G
- Controller : SPLC780D1 or equivalent controller
- Interface : 8-bit parallel interface
- Backlight : yellow-green/bottom light
- Viewing Direction : 6 O'clock
- Driving Scheme : 1/16 Duty Cycle, 1/5 Bias
- Power Supply Voltage : 5.0 V
- V_{LCD} Adjustable For Best Contrast : 4.7 V ($V_{OP.}$)
- Operation temperature : -20℃ to +70℃
- Storage temperature : -30℃ to +80℃

BLOCK DIAGRAM

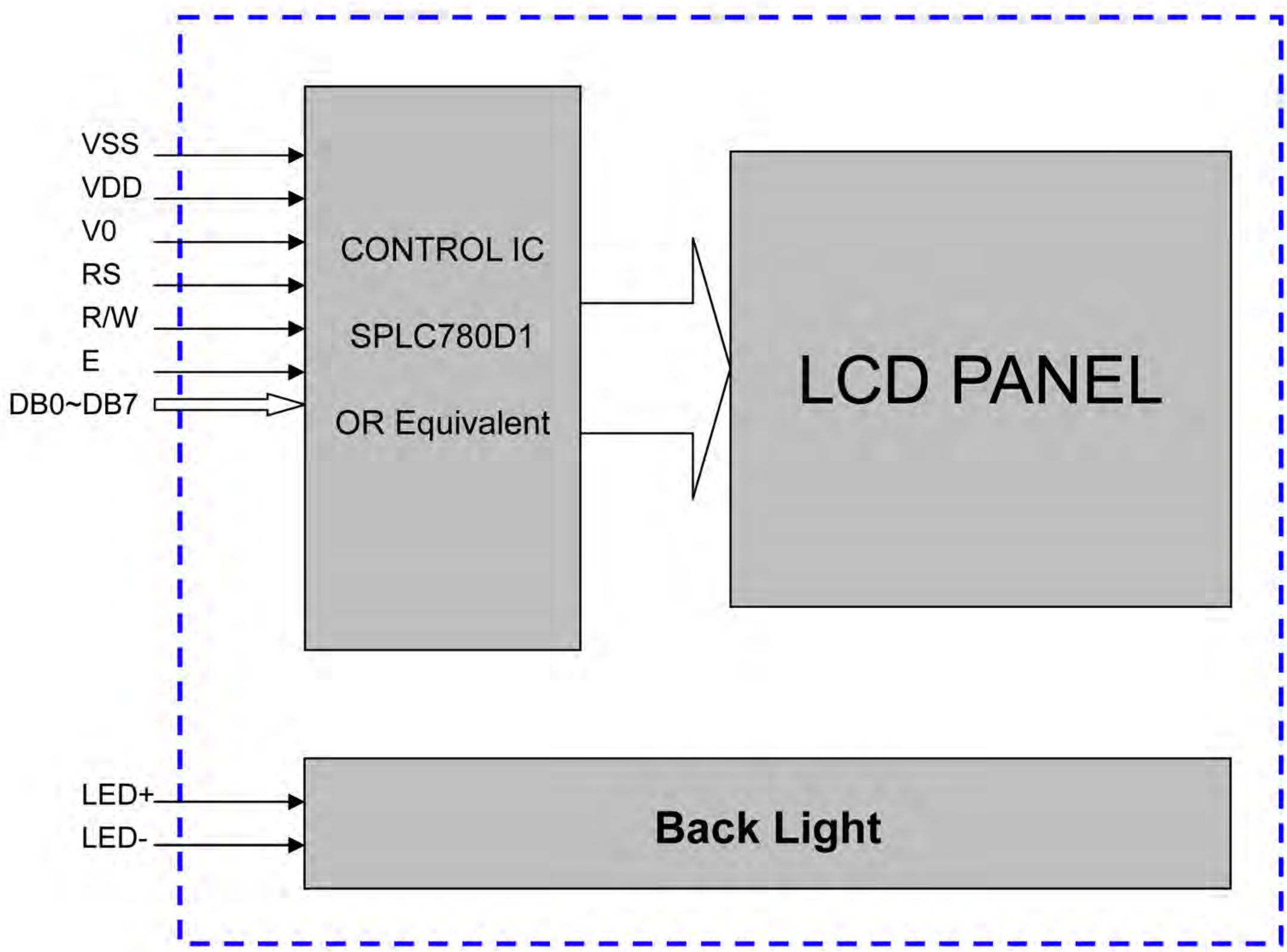

MODULE OUTLINE DRAWING

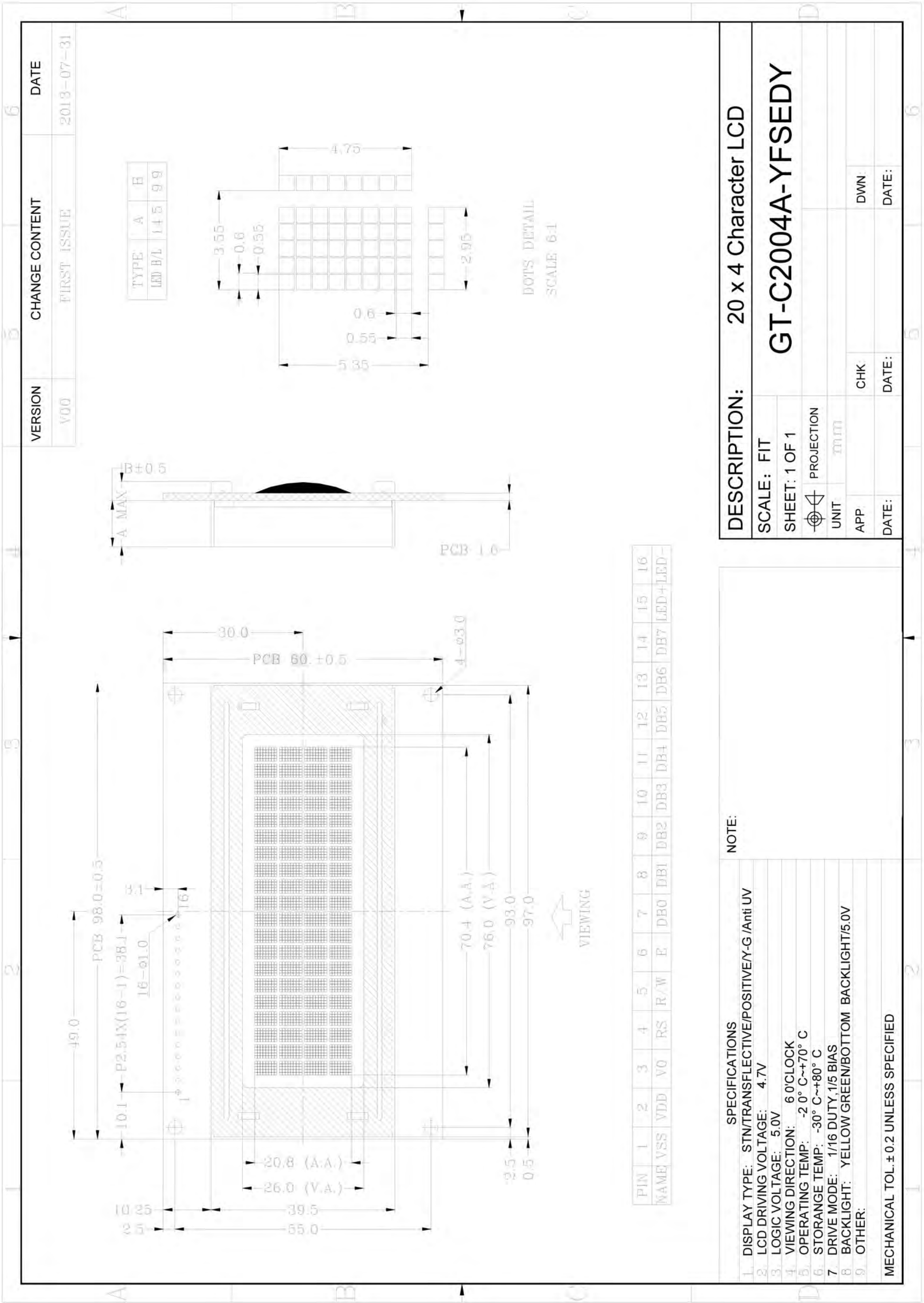

INTERFACE PIN FUNCTIONS

Pin No.	Symbol	Level	Description
1	VSS	0V	Ground.
2	VDD	+5.0V	Power supply for logic operating.
3	V0	--	Adjusting supply voltage for LCD driving.
4	RS	H/L	A signal for selecting registers: 1: Data Register (for read and write) 0: Instruction Register (for write), Busy flag-Address Counter (for read).
5	R/W	H/L	R/W = "H": Read mode. R/W = "L": Write mode.
6	E	H/L	An enable signal for writing or reading data.
7	DB0	H/L	This is an 8-bit bi-directional data bus.
8	DB1	H/L	
9	DB2	H/L	
10	DB3	H/L	
11	DB4	H/L	
12	DB5	H/L	
13	DB6	H/L	
14	DB7	H/L	
15	LED+	+5.0V	Power supply for backlight.
16	LED-	0V	The backlight ground.

ABSOLUTE MAXIMUM RATINGS (Ta = 25℃)

Parameter	Symbol	Min	Max	Unit
Supply voltage for logic	V_{DD}	-0.3	+5.5	V
Supply voltage for LCD	V_o	VDD-1	V_{DD} +0.3	V
Input voltage	V_I	-0.3	V_{DD} +0.3	V
Normal Operating temperature	T_{OP}	-20	+70	℃
Normal Storage temperature	T_{ST}	-30	+80	℃

Note: Stresses beyond those given in the Absolute Maximum Rating table may cause operational errors or damage to the device. For normal operational conditions see AC/DC Electrical Characteristics.

DC ELECTRICAL CHARACTERISTICS

Parameter	Symbol	Condition	Min	T_{YP}	Max	Unit
Supply voltage for logic	VDD	--	4.8	5.0	5.2	V
Supply current for logic	IDD	--	--	185	190	mA
Operating voltage for LCD	VLCD	-10℃				
		+25℃	4.5	4.7	4.9	V
		+60℃				
Input voltage"H"level	VIH	--	0.7 VDD	--	VDD+0.3	V
Input voltage "L" level	VIL	--	0	--	0.2VDD	V

LED BACKLIGHT CHARACTERISTICS

Parameter	Symbol	Condition	M_{IN}	T_{YP}	M_{AX}	Unit
Forward Voltage	Vf	If=180mA	3.9	4.1	4.3	V
Reverse Current	Ir	Vr=5.0V	--	--	180	μ A
Wavelength	λ d	If=180mA	588	591	594	nm
Spectral width at half height	Δ λ	If=180mA	--	30	--	nm
Luminance	Lv Sub.	If=180mA	235	265	--	cd/m^2
Uniformity	Δ	M_{IN}/M_{AX}*100%	75	--	--	%

CONNECTION WITH MCU

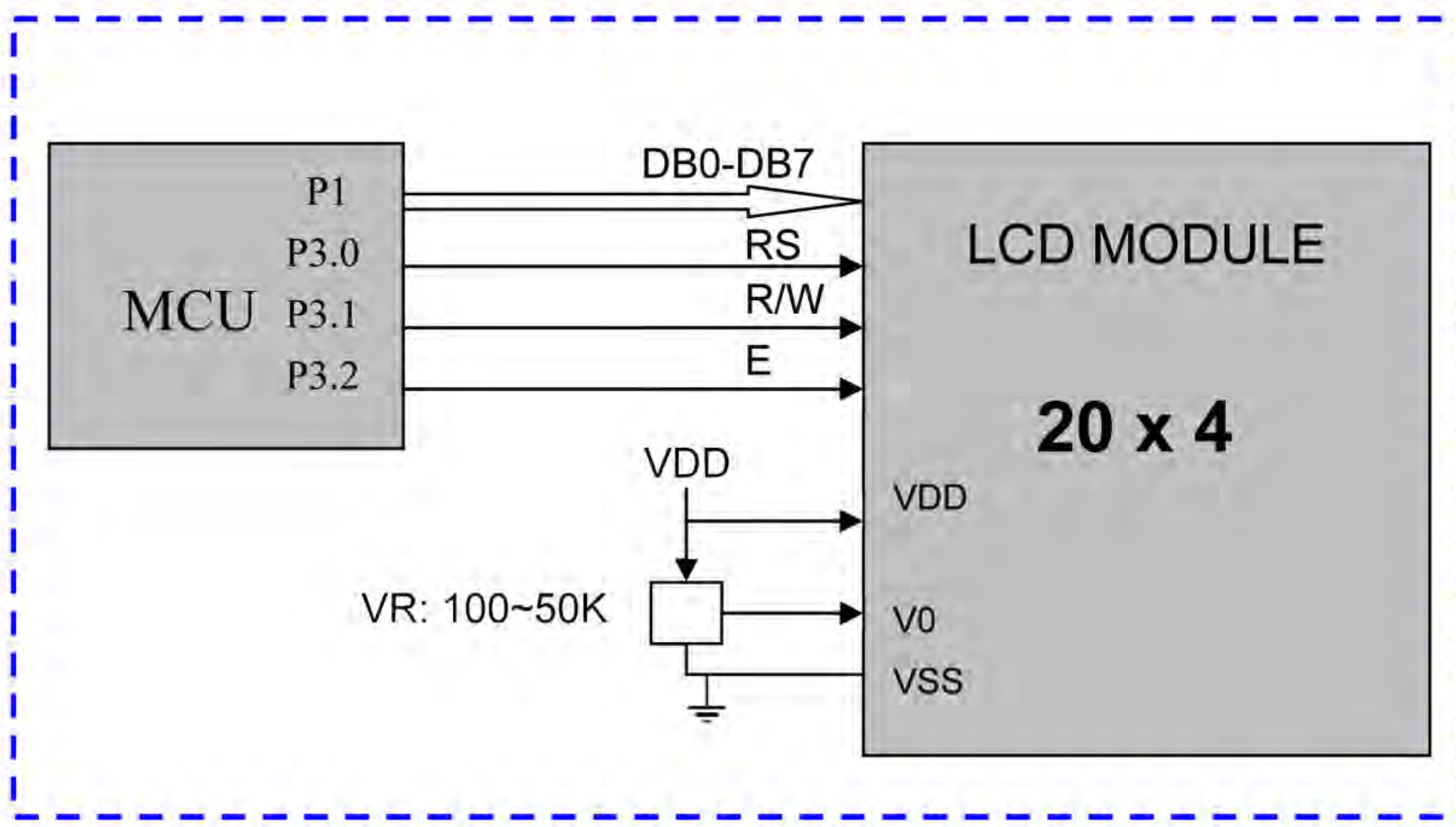

(1) TYPICAL VO CONNECTIONS FOR DISPLAY CONTRAST

Adjust VO to VDD (VLCD=4.7V) as an initial setting. When the module is operational, readjust VO for optimal display appearance.

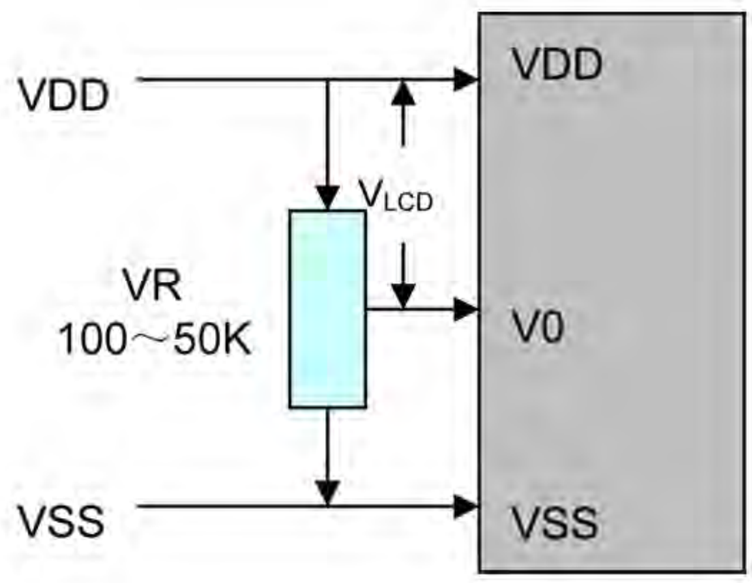

We recommend allowing field adjustment of VO for all designs. The optimal value for VO will change with temperature, variations in VDD, and viewing angle. VO will also vary module-to-module and batch-to-batch due to normal manufacturing variations.
Ideally, adjustment to VO should be available to the end user so each user can adjust the display to the optimal contrast for their required viewing conditions. As a minimum, your design should allow VO to be adjusted as part of your product's final test.
Although a potentiometer is shown as a typical connection, VO can be driven by your microcontroller, either by using a DAC or a filtered PWM. Displays that require VO to be negative may need a level-shifting circuit.

(2) MPU INTERFACE 4-bit/8-Bit

There are tow types of data operations: 4-bit and 8-bit operations. Using 4-bit MPU, the interfacing 4-bit data is transferred by 4-busline (DB4—DB7). Thus, DBO to DB3 bus lines are not used. Using 4-bit MPU to interface 8-bit data requires tow times transferring. First, the higher 4-bit data is transferred by 4-busline (for 8-bit operation, DB7—DB4). Secondly, the lower 4-bit data is transferred by 4-busline (for 8-bit operation, DB3～DBO). For 8-bit MPU, the 8-bit data is transferred by 8-busline (DBO～DB7).

AC CHARACTERISTICS

(1) Write Mode (Writing data from MPU to SPLC780D1)

Characteristics	Symbol	Limit			Unit	Test Condition
		Min.	Typ.	Max.		
E Cycle Time	t_C	400	-	-	ns	Pin E
E Pulse Width	t_{PW}	150	-	-	ns	Pin E
E Rise/Fall Time	t_R, t_F	-	-	25	ns	Pin E
Address Setup Time	t_{SP1}	30	-	-	ns	Pins: RS, R/W, E
Address Hold Time	t_{HD1}	10	-	-	ns	Pins: RS, R/W, E
Data Setup Time	t_{SP2}	40	-	-	ns	Pins: DB0 - DB7
Data Hold Time	t_{HD2}	10	-	-	ns	Pins: DB0 - DB7

Write Mode Timing Diagram (Writing data from MPU to SPLC780D1)

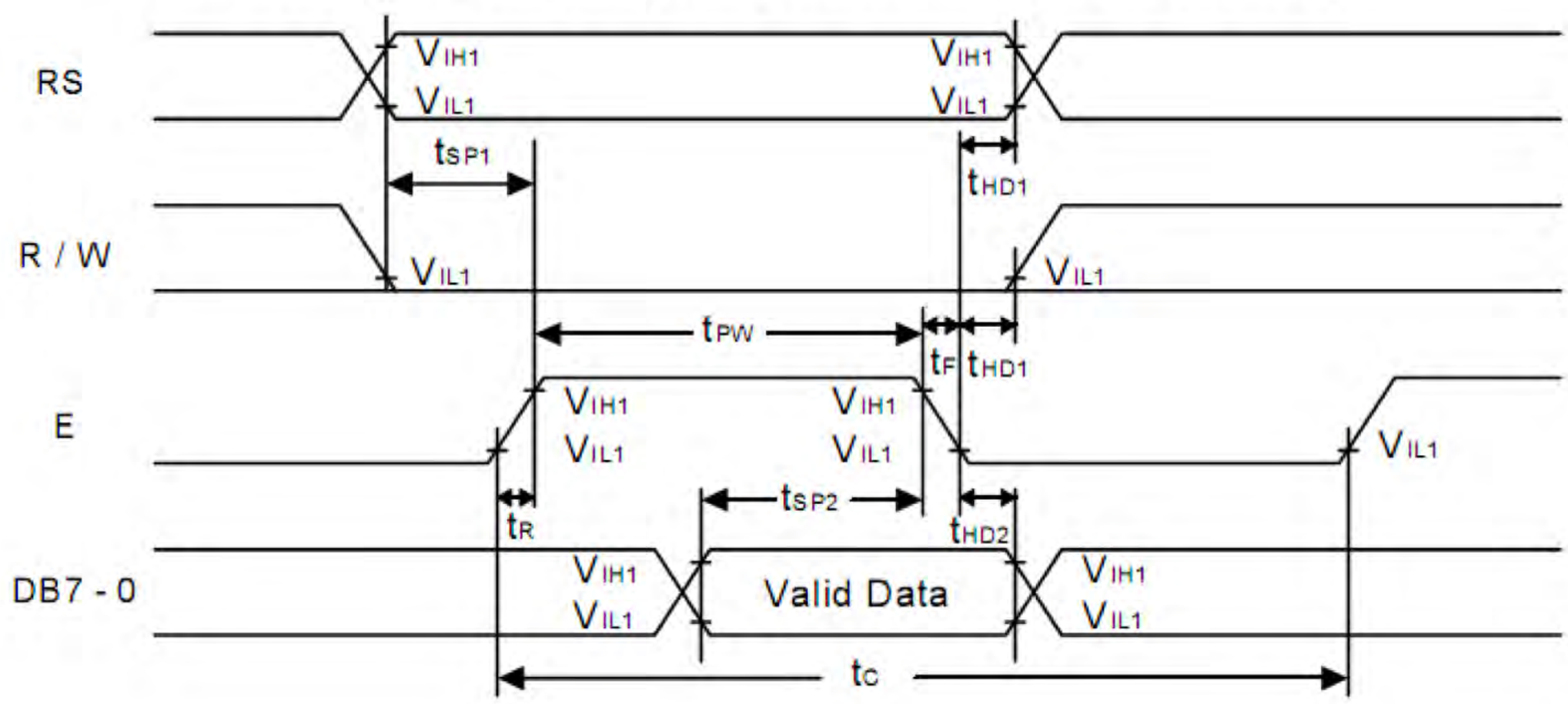

(2) Read Mode (Reading data from SPLC780D1 to MPU)

Characteristics	Symbol	Limit			Unit	Test Condition
		Min.	Typ.	Max.		
E Cycle Time	t_C	400	-	-	ns	Pin E
E Pulse Width	t_W	150	-	-	ns	Pin E
E Rise/Fall Time	t_R, t_F	-	-	25	ns	Pin E
Address Setup Time	t_{SP1}	30	-	-	ns	Pins: RS, R/W, E
Address Hold Time	t_{HD1}	10	-	-	ns	Pins: RS, R/W, E
Data Output Delay Time	t_D	-	-	100	ns	Pins: DB0 - DB7
Data hold time	t_{HD2}	5.0	-	-	ns	Pin DB0 - DB7

Read Mode Timing Diagram (Reading data from SPLC780D1 to MCU)

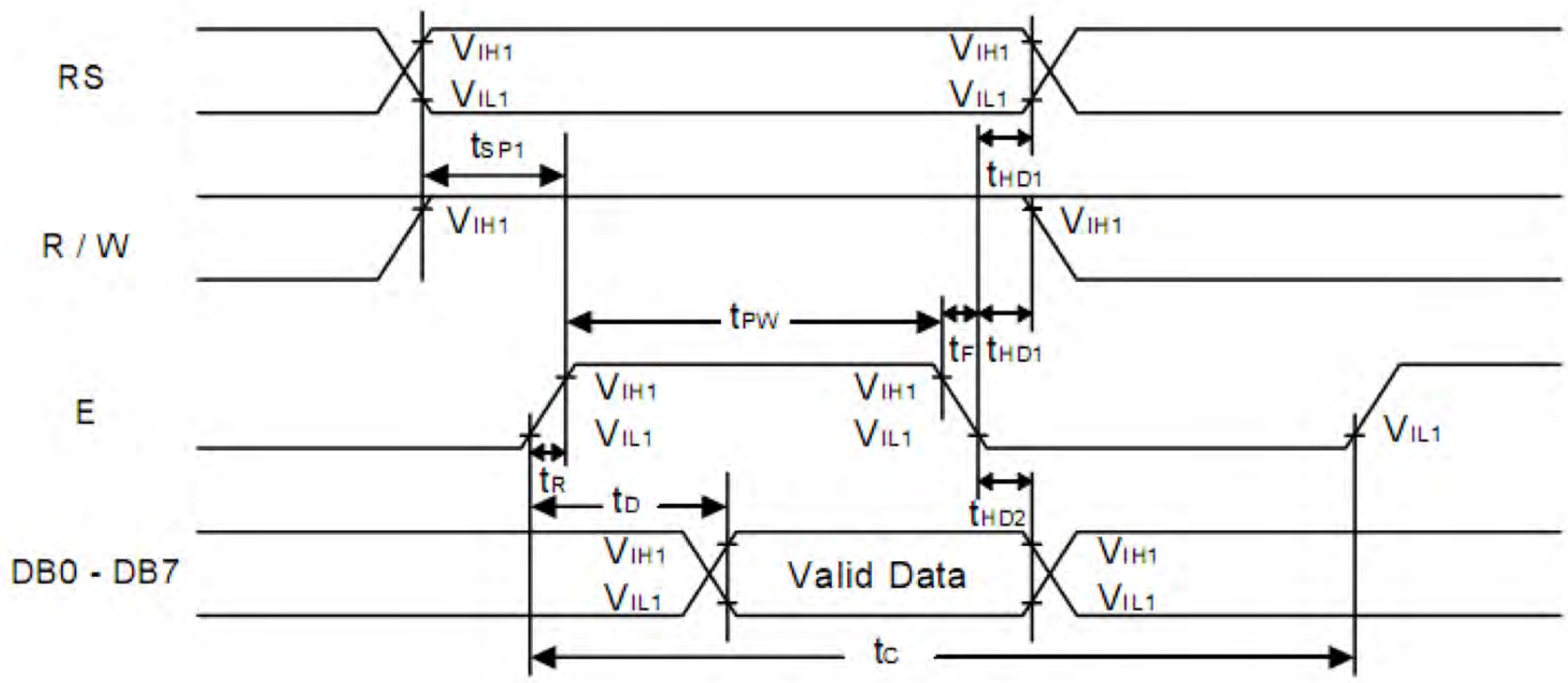

(3) Interface mode with LCD driver (SPLC100B1)

Characteristics	Symbol	Limit			Unit	Test Condition
		Min.	Typ.	Max.		
Clock pulse width high	t_{PWH}	800	-	-	ns	Pins: CL1, CL2
Clock pulse width low	t_{PWL}	800	-	-	ns	Pins: CL1, CL2
Clock setup time	t_{CSP}	500	-	-	ns	Pins: CL1, CL2
Data setup time	t_{DSP}	300	-	-	ns	Pins: D
Data hold time	t_{HD}	300	-	-	ns	Pins: D
M delay time	t_D	-1000	-	1000	ns	Pins: M

Interface mode with SPLC100B1 Timing Diagram

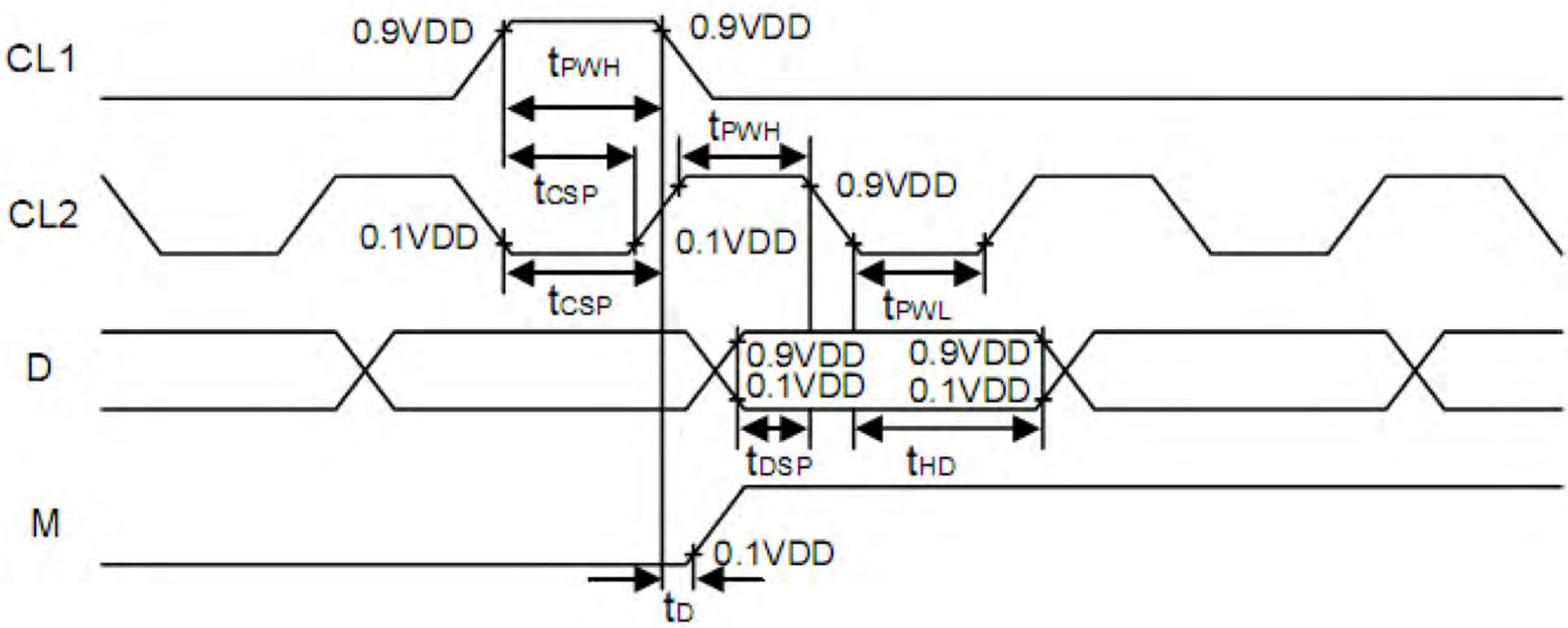

OPTICAL CHARACTERISTICS

ITEM	SYMBOL	CONDITION	MIN	TYP	MAX	UNIT	NOTE
Contrast ratio	CR	θ=0，Φ=0	-	4	-		
Response time(rise)	Tr	25℃		-	250	ms	
Response time(fall)	Td			-	350		
Viewing angle	θf	25℃		35		deg.	
	θb			30			
	θl			25			
	θr			25			

Note1: Definition Operation Voltage (V_{OP})

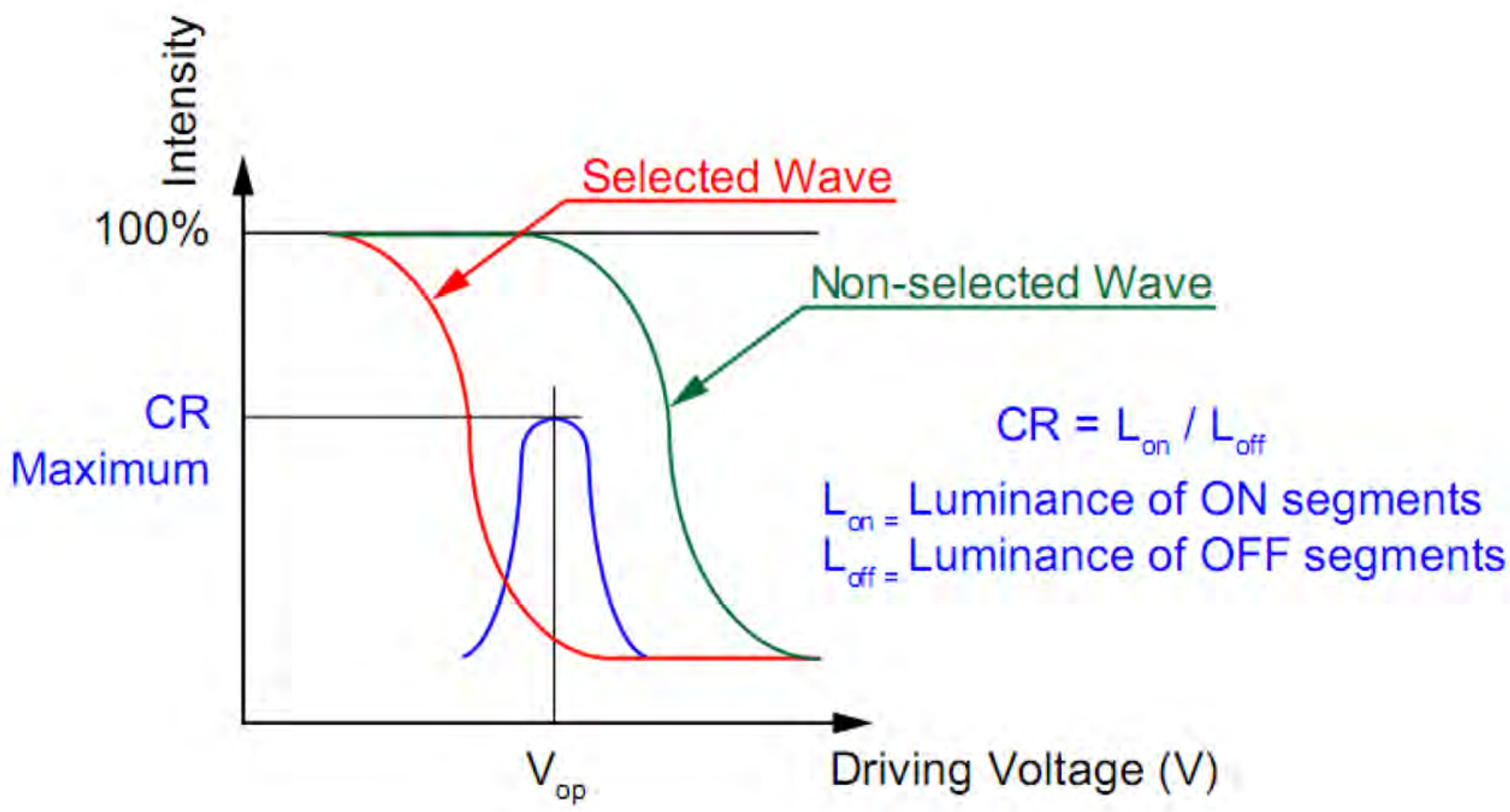

Note2: Response time

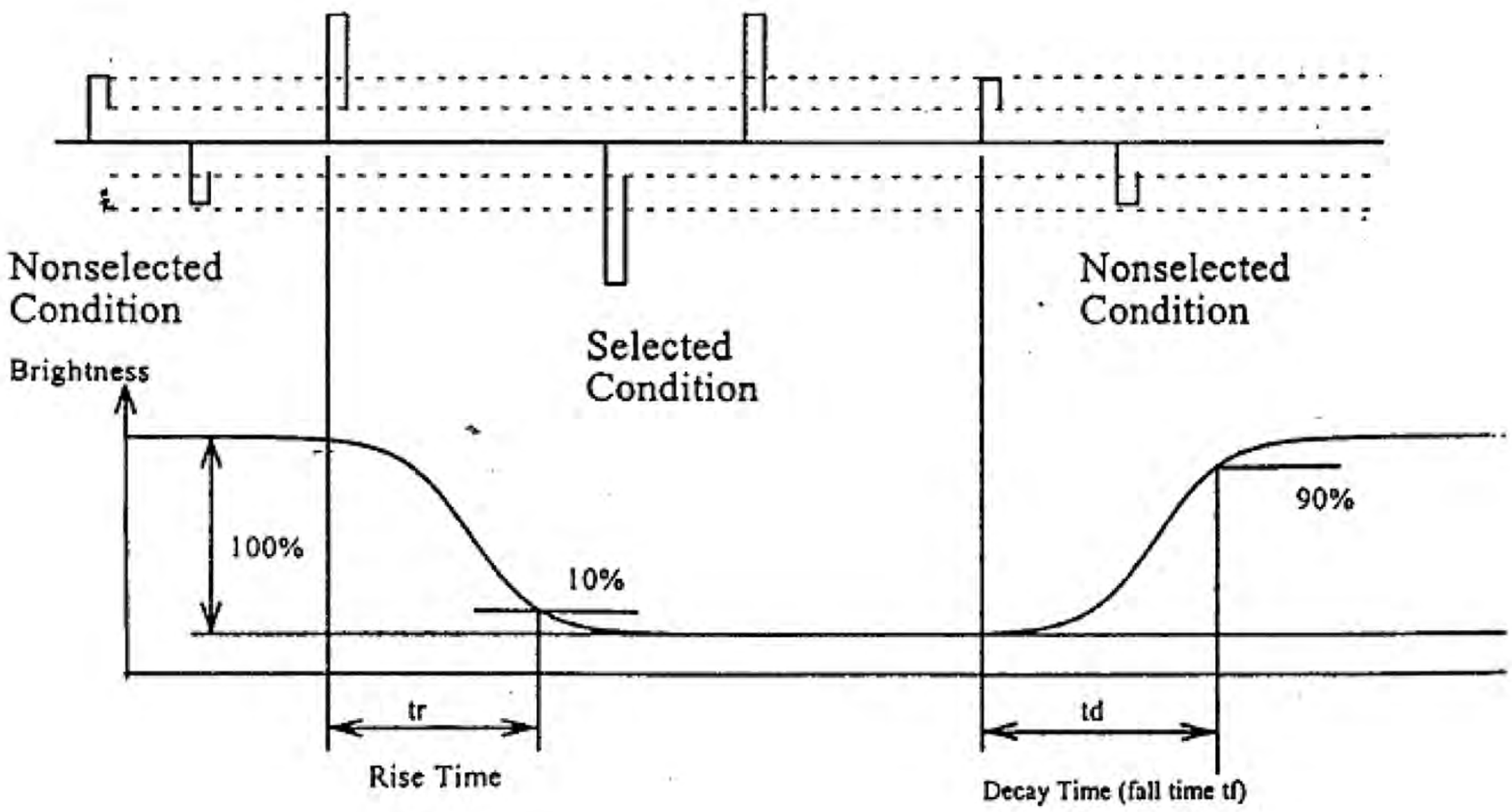

Note3: Viewing angle

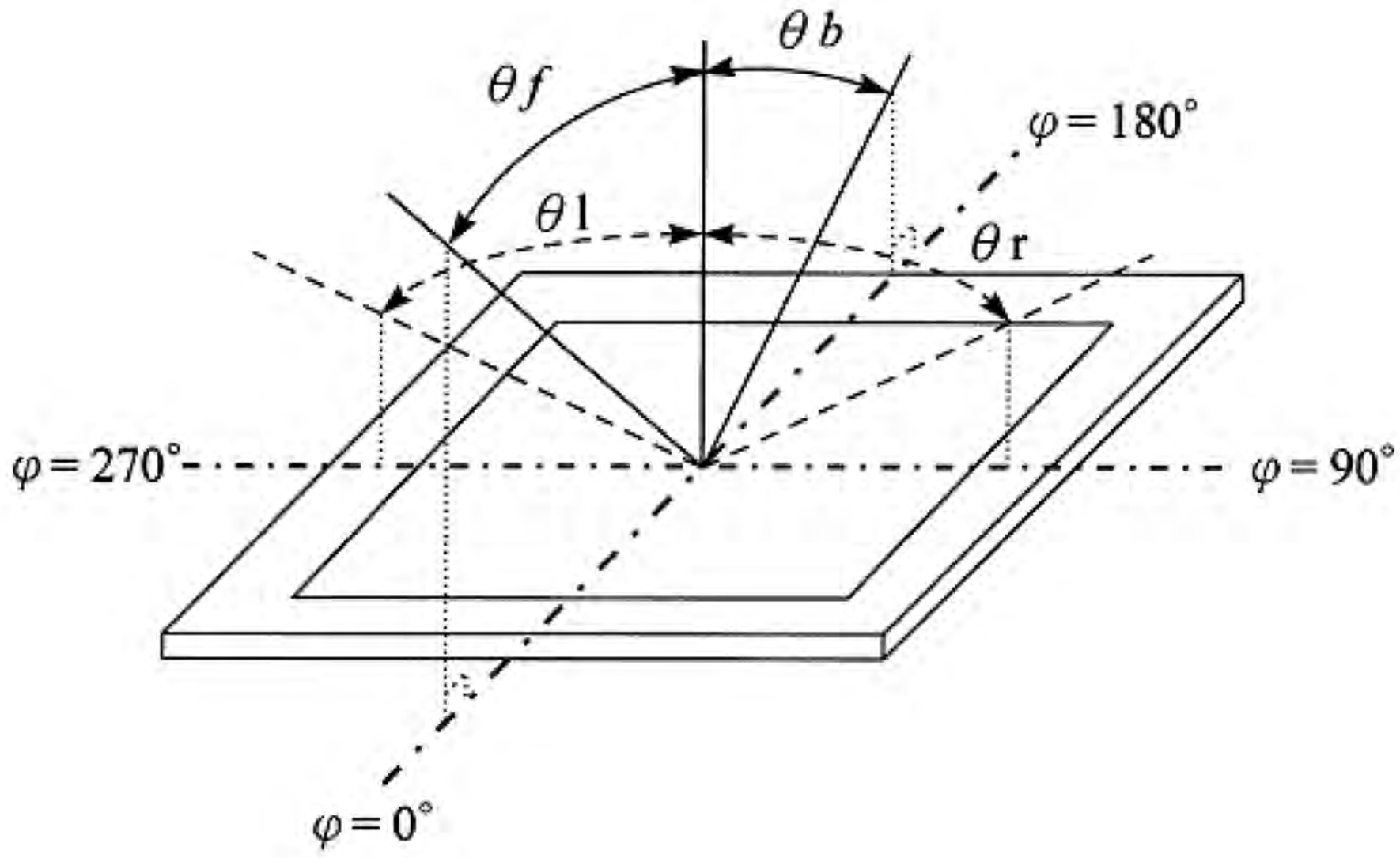

COMMAND TABLE

Instruction	Instruction Code										Description	Execution time (Temp = 25℃)		
	RS	RW	DB7	DB6	DB5	DB4	DB3	DB2	DB1	DB0		Fosc= 190KHz	Fosc= 270KHz	Fosc= 350KHz
Clear Display	0	0	0	0	0	0	0	0	0	1	Write "20H" to DDRAM and set DDRAM address to "00H" from AC	2.16ms	1.52ms	1.18ms
Return Home	0	0	0	0	0	0	0	0	1	-	Set DDRAM address to "00H" from AC and return cursor to its original position if shifted. The contents of DDRAM are not changed.	2.16ms	1.52ms	1.18ms
Entry Mode Set	0	0	0	0	0	0	0	1	I/D	S	Assign cursor moving direction and enable the shift of entire display	53μs	38μs	29μs
Display ON/ OFF Control	0	0	0	0	0	0	1	D	C	B	Set display (D), cursor(C), and blinking of cursor(B) on/off control bit.	53μs	38μs	29μs
Cursor or Display Shift	0	0	0	0	0	1	S/C	R/L	-	-	Set cursor moving and display shift control bit, and the direction, without changing of DDRAM data.	53μs	38μs	29μs
Function Set	0	0	0	0	1	DL	N	F	-	-	Set interface data length (DL: 8-bit/4-bit), numbers of display line (N: 2-line/1-line) and, display font type (F:5x10 dots/5x8 dots)	53μs	38μs	29μs
Set CGRAM Address	0	0	0	1	AC5	AC4	AC3	AC2	AC1	AC0	Set CGRAM address in address counter.	53μs	38μs	29μs
Set DDRAM Address	0	0	1	AC6	AC5	AC4	AC3	AC2	AC1	AC0	Set DDRAM address in address counter	53μs	38μs	29μs
Read Busy Flag and Address Counter	0	1	BF	AC6	AC5	AC4	AC3	AC2	AC1	AC0	Whether during internal operation or not can be known by reading BF. The contents of address counter can also be read.			
Write Data to RAM	1	0	D7	D6	D5	D4	D3	D2	D1	D0	Write data into internal RAM (DDRAM/CGRAM).	53μs	38μs	29μs
Read Data from RAM	1	1	D7	D6	D5	D4	D3	D2	D1	D0	Read data from internal RAM (DDRAM/CGRAM).	53μs	38μs	29μs

Note1: "--": don't care

Note2: In the operation condition under -20℃ ~ 75℃, the maximum execution time for majority of instruction sets is 100us, except two instructions, "Clear Display" and "Return Home", in which maximum execution time can take up to 4.1ms.

RESET FUNCTION

At power on, SPLC780D1 starts the internal auto-reset circuit and executes the initial instructions. The initial procedures are shown as follows:

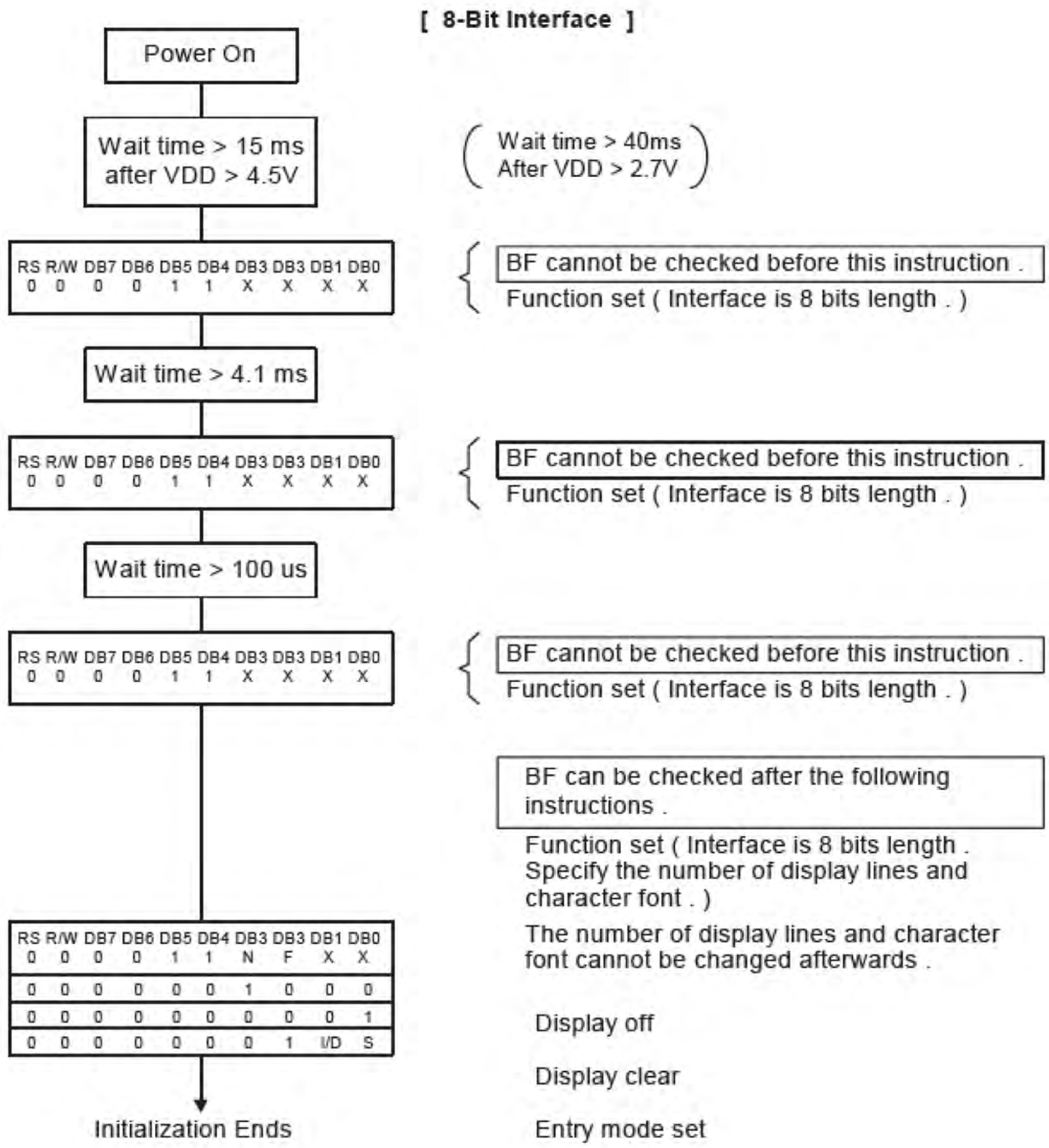

[4-Bit Interface]

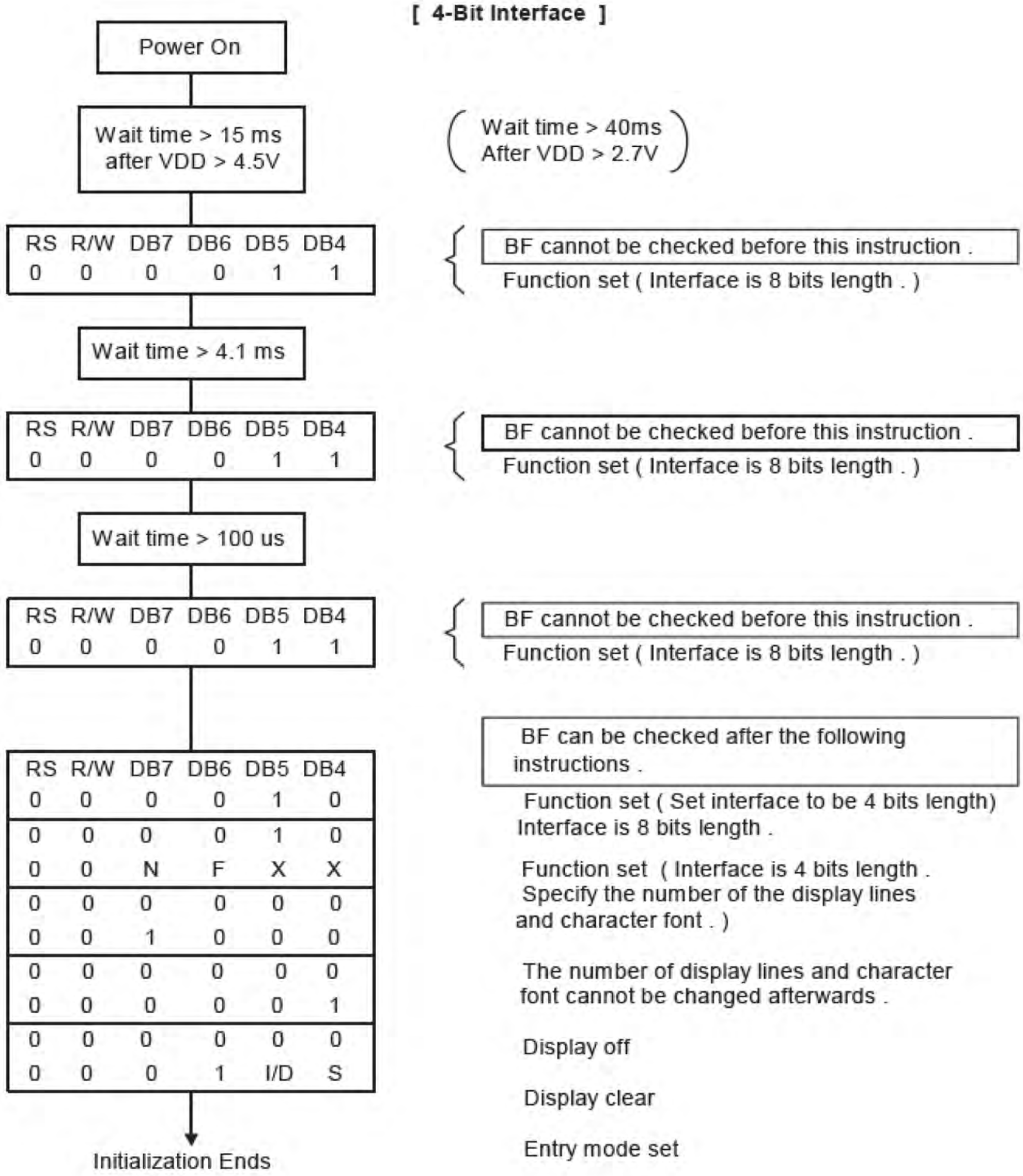

DISPLAY DATA RAM (DD RAM)

The 80-bit DD RAM is normally used for storing display data. Those DD RAM not used for display data can be used as general data RAM. Its address is configured in the Address Counter.

	1	2	3	4	5	6	7	8	9	10	11	12	13	14	15	16	17	18	19	20
Line 1	00	01	02	03	04	05	06	07	08	09	0A	0B	0C	0D	0E	0F	10	11	12	13
Line 2	40	41	42	43	44	45	46	47	48	49	4A	4B	4C	4D	4E	4F	50	51	52	53
Line 3	14	15	16	17	18	19	1A	1B	1C	1D	1E	1F	20	21	22	23	24	25	26	27
Line 4	54	55	56	57	58	59	5A	5B	5C	5D	5E	5F	60	61	62	63	64	65	66	67

Timing Generation Circuit

The timing generating circuit is able to generate timing signals to the internal circuits. In order to prevent the internal timing interface, the MPU access timing and the RAM access timing are generated independently.

LCD Driver Circuit

Total of 16 commons and 40 segments signal drivers are valid in the LCD driver circuit. When a program specifies the character fonts and line numbers, the corresponding common signals output drive-waveforms and the others still output unselected waveforms. The relationships between Display Data RAM Address and LCD's position are depicted as follows.

Character Generator ROM (CG ROM)

Using 8-bit character code, the character generator ROM generates 5 x 8 dots or 5 x 10 dots character patterns. It also can generate 192's 5 x 8 dots character patterns and 64's 5 x 10 dots character patterns.

Character Generator RAM (CG RAM)

Users can easily change the character patterns in the character generator RAM through program. It can be written to 5 x 8 dots, 8-character patterns or 5 x 10 dots for 4-character patterns.

CHARACTER GENERATOR ROM

SPLC780D1-001A:

Upper 4 bit / Lower 4 bit	LLLL	LLLH	LLHL	LLHH	LHLL	LHLH	LHHL	LHHH	HLLL	HLLH	HLHL	HLHH	HHLL	HHLH	HHHL	HHHH
LLLL																
LLLH																
LLHL																
LLHH																
LHLL																
LHLH																
LHHL																
LHHH																
HLLL																
HLLH																
HLHL																
HLHH																
HHLL																
HHLH																
HHHL																
HHHH																

RELIABILITY TEST CONDITION

No.	TEST Item	Content of Test	Test Condition	Applicable Standard
1	High temperature storage	Endurance test applying the high storage Temperature for a long time.	80ºC 96hrs	--
2	Low temperature storage	Endurance test applying the low storage Temperature for a long time	-30ºC 96hrs	--
3	High temperature operation	Endurance test applying the electric stress (Voltage & current)and the thermal stress to the element for a long time	70ºC 96hrs	--
4	Low temperature operation	Endurance test applying the electric stress Under low temperature for a long time	-20ºC 96hrs	--
5	High temperature/ Humidity storage	Endurance test applying the electric stress(Voltage & current) and Temperature/ Humidity stress to the element for a long time	40ºC 90%RH 96hrs	--
6	High temperature/ Humidity operation	Endurance test applying the electric stress (voltage & current)and temperature/ humidity stress to the element for a long time	40ºC 90%RH 96hrs	--
7	Temperature cycle	Endurance test applying the low and high temperature cycle. -20ºC →25ºC→70ºC 30min←5min←30min.(1 cycle)	-20ºC/70ºC 10 cycle	--

Supply voltage for logic system = 5V. Supply voltage for LCD system = Operating voltage at 25ºC.

MECHANICAL TEST

Vibration test	Endurance test applying the vibration during transportation and using	10~22Hz→1.5mmp-p 22~500Hz→1.5G Total 0.5hour	Applicable Standard
Shock test	Constructional and mechanical endurance test applying the shock during transportation.	50G half sign wave 11 msede 3 times of each direction	--
Atmospheric pressure test	Endurance test applying the atmospheric pressure during transportation by air	115mbar 40hrs	--
Static electricity test	Endurance test applying the electric stress to the terminal	VS=800V,RS-1.5KΩ CS=100pF, 1 time	--

Environmental condition

The inspection should be performed at the 1metre height from the LCD module under 2 pieces of 40W white fluorescent lamps (Normal temperature 20~25℃ and normal humidity 60±15%RH).

PRECAUTION FOR SOLDERING TO THE LCM

(1) Observe the following when soldering lead wire, connector cable and etc. to the LCM.

- Soldering iron temperature : 275°C ± 10°C.
- Soldering time : 3-6 sec.
- Solder : eutectic solder.

If soldering flux is used, be sure to remove any remaining flux after finishing to soldering operation. (This does not apply in the case of a non-halogen type of flux.) It is recommended that you protect the LCD surface with a cover during soldering to prevent any damage due to flux spatters.

(2) When soldering the electroluminescent panel and PC board, the panel and board should not be detached more than three times. This maximum number is determined by the temperature and time conditions mentioned above, though there may be some variance depending on the temperature of the soldering iron.

(3) When remove the electroluminescent panel from the PC board, be sure the solder has completely melted, the soldered pad on the PC board could be damaged.

PRECAUTION FOR USING LCM MODULE

- Please remove the protection foil of polarizer before using.
- The display panel is made of glass. Do not subject it to a mechanical shock by dropping it from a high place, etc.
- If the display panel is damaged and the liquid crystal substance inside it leaks out, do not get any in your mouth. If the substance come into contact with your skin or clothes promptly wash it off using soap and water.
- Do not apply excessive force to the display surface or the adjoining areas since this may cause the color tone to vary.
- The polarizer covering the display surface of the LCD module is soft and easily scratched. Handle this polarize carefully.
- To prevent destruction of the elements by static electricity, be careful to maintain an optimum work environment.
  -Be sure to ground the body when handling the LCD module.
  -Tools required for assembly, such as soldering irons, must be properly grounded.
  -To reduce the amount of static electricity generated, do not conduct assembly and other work under dry conditions.
  -The LCD module is coated with a film to protect the display surface. Exercise care when peeling off this protective film since static electricity may be generated.
- Storage precautions
  When storing the LCD modules, avoid exposure to direct sunlight or to the light of fluorescent lamps.
  Keep the modules in bags designed to prevent static electricity charging under low temperature / normal humidity conditions (avoid high temperature / high humidity and low temperatures below 0℃).Whenever possible, the LCD modules should be stored in the same conditions in which they were shipped from our company.

OTHERS

- Liquid crystals solidify at low temperature (below the storage temperature range) leading to defective orientation of liquid crystal or the generation of air bubbles (black or white). Air bubbles may also be generated if the module is subjected to a strong shock at a low temperature.

- If the LCD modules have been operating for a long time showing the same display patterns may remain on the screen as ghost images and a slight contrast irregularity may also appear. Abnormal operating status can be resumed to be normal condition by suspending use for some time. It should be noted that this phenomena does not adversely affect performance reliability.

- To minimize the performance degradation of the LCD modules resulting from caused by static electricity, etc. exercise care to avoid holding the following sections when handling the modules :
  - Exposed area of the printed circuit board
  - Terminal electrode sections