GLOMORE

GM-M-057QV-A1F-L-4

LCD Solutions

5.7" QVGA TFT with
MCU Interface
and 4 wire Resistive Touch Panel

Contents

1. Revision History
2. General Specification
3. Interface Pin Function
4. Outline dimension & Block Diagram
5. Display Control Instruction
6. Optical Characteristics
7. Absolute Maximum Ratings
8. Electrical Characteristics
9. Backlight Information
10. Touch panel Information
11. Inspection specification
12. Precautions in use of LCD Modules
13. Material List of Components for RoHs

1. Revision History

DATE	VERSION	REVISED PAGE NO.	Note
2009/5/14	1		First issue

2. General Specification

This product is composed of a TFT LCD panel, driver ICs, FPC, Control Board and a backlight unit.

- Dot Matrix: 320 x RGB x240
- Module dimension:149.0 x 109.0 x 13.0 (max.) mm^3
- View area: 115.2x86.4 mm^2
- Dot pitch: 0.12 x 0.36 mm2
- LCD type: TFT, Negative, Transmissive
- View direction: 6 o'clock
- Backlight Type: LED, Normally White
- Controller IC: SSD1963
- Driving IC package: COG

*Expose the IC number blaze (Luminosity over than 1 cd) when using the LCM may cause IC operating failure.

*Color tone slight changed by temperature and driving voltage.

3. Interface Pin Function

Pins Connection to Control Board

P/N	Symbol	8 B IT Function
1	GND	Ground
2	VCC	Power supply for Logic
3	NC	No connection
4	RS	
5	WR	8080 family MPU interface : Write signal
6	RD	8080 family MPU interface: Read signal
7	DB0	Data bus
8	DB1	
9	DB2	
10	DB3	
11	DB4	
12	DB5	
13	DB6	
14	DB7	
15	CS	Chip select
16	RES	REST
17	NC	No connection
18	RL	Scan direction
19	UD	Scan direction
20	NC	No connection

4. Outline Dimension & Block Diagram

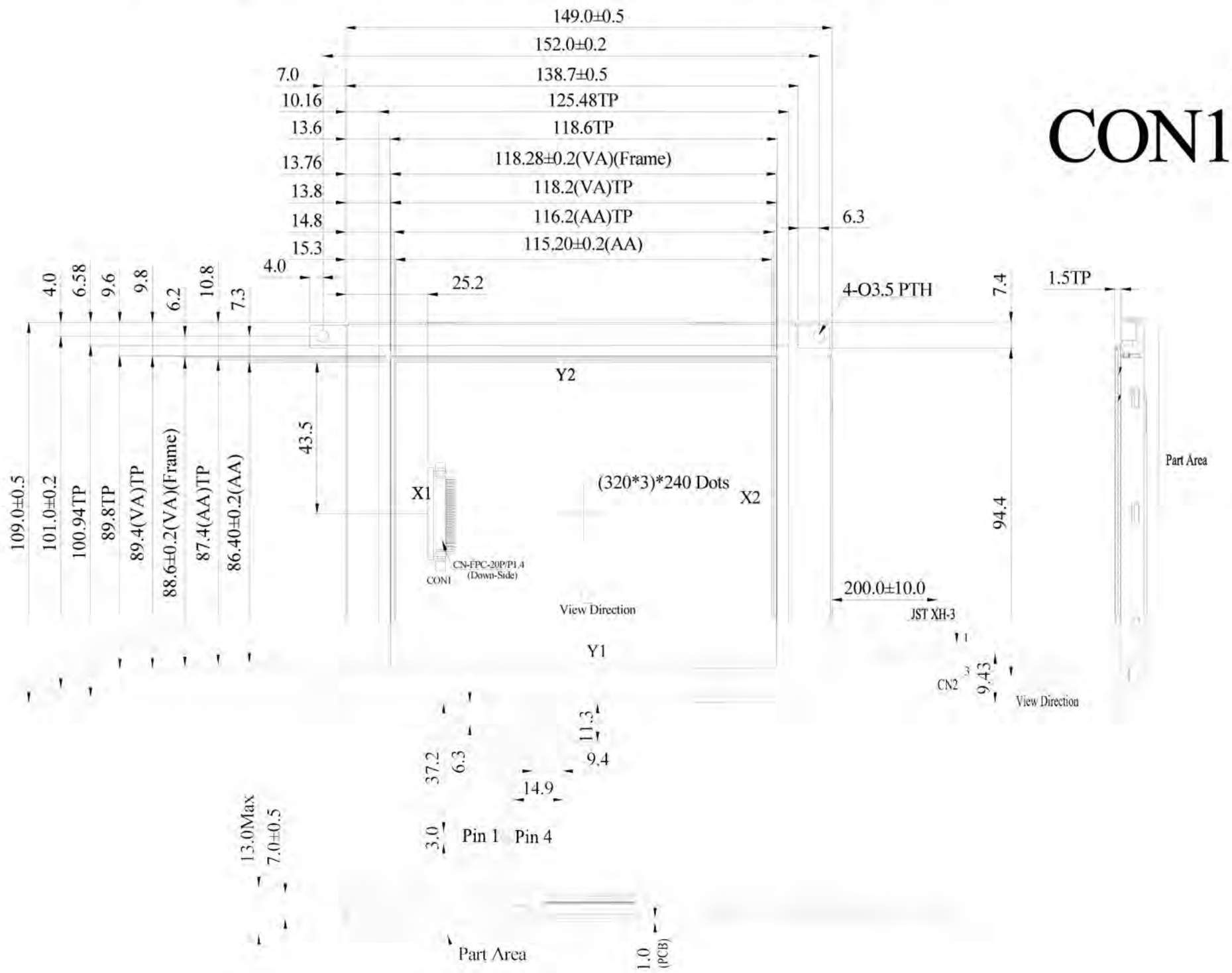

CON1

8bit mode

PIN NO.	SYMBOL	PIN NO.	SYMBOL
1	GND	17	NC
2	VCC	18	RL
3	NC	19	UD
4	RS	20	NC
5	WR		
6	RD		
7	DB0		
8	DB1		
9	DB2		
10	DB3		
11	DB4		
12	DB5		
13	DB6		
14	DB7		
15	CS		
16	RST		

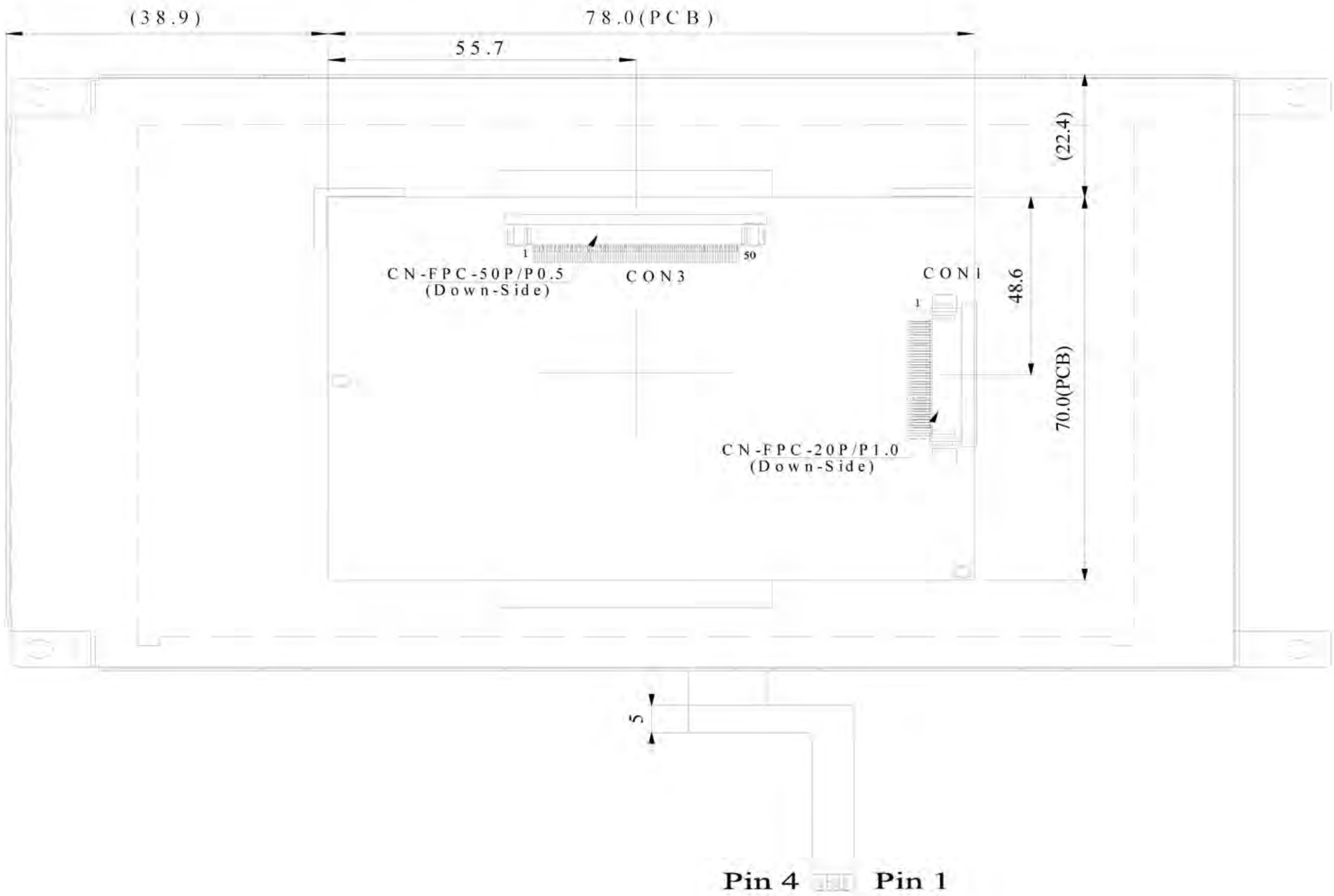

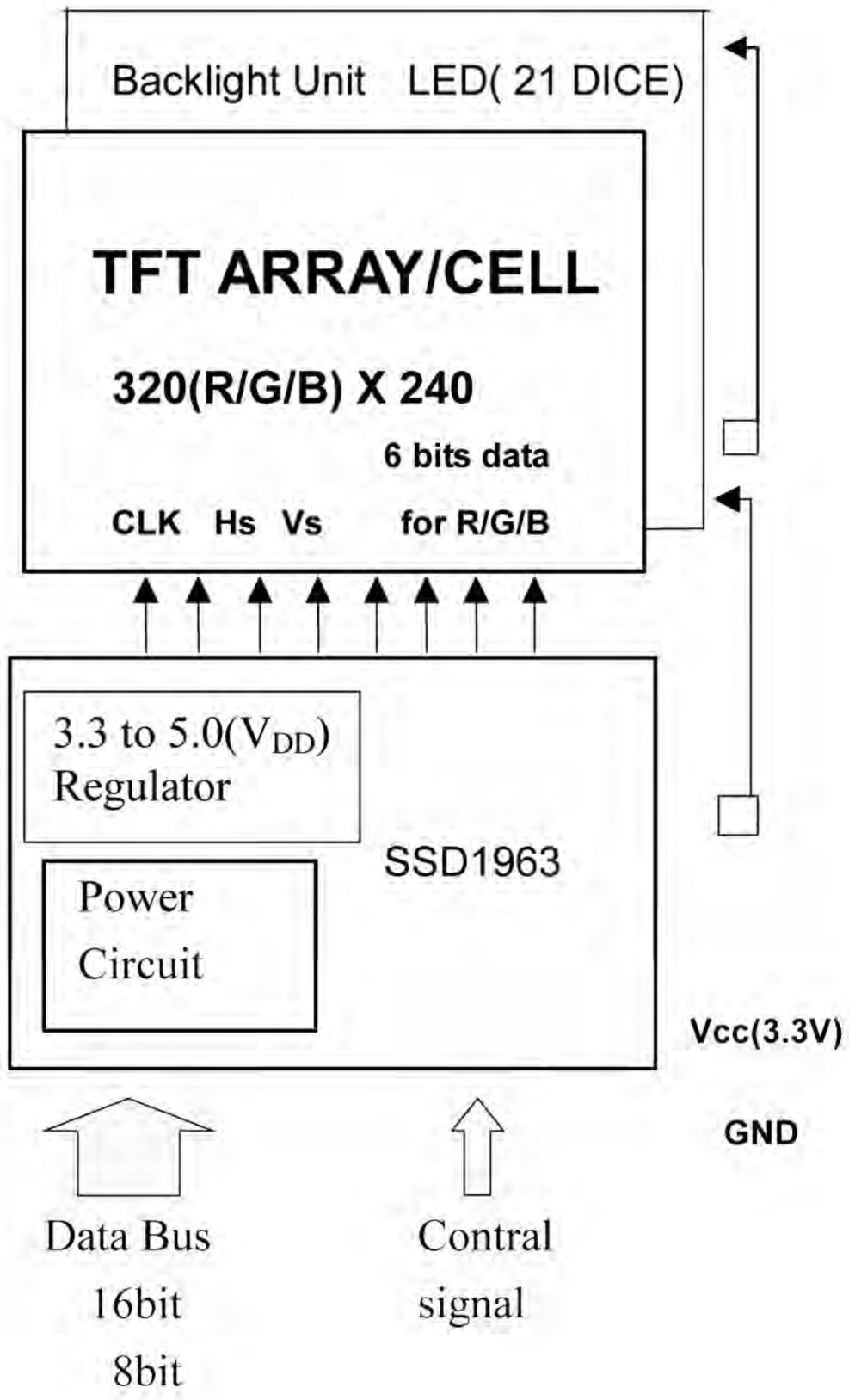
Backlight Unit LED(21 DICE)
TFT ARRAY/CELL
320(R/G/B) X 240
6 bits data
CLK Hs Vs for R/G/B
3.3 to 5.0(VDD)
Regulator
SSD1963
Power
Circuit
Vcc(3.3V)
GND
Data Bus
16bit
8bit
Contral
signal

5. Display Control Instruction

6.1 Data transfer order Setting

Pixel Data Format

Both 6800 and 8080 support 8-bit, 9-bit, 16-bit, 18-bit and 24-bit data bus. Depending on the width of the data bus, the display data are packed into the data bus in different ways.

Pixel Data Format：

Interface	Cycle	D[23]	D[22]	D[21]	D[20]	D[19]	D[18]	D[17]	D[16]	D[15]	D[14]	D[13]	D[12]	D[11]	D[10]	D[9]	D[8]	D[7]	D[6]	D[5]	D[4]	D[3]	D[2]	D[1]	D[0]
24 bits	1st	R7	R6	R5	R4	R3	R2	R1	R0	G7	G6	G5	G4	G3	G2	G1	G0	B7	B6	B5	B4	B3	B2	B1	B0
18 bits	1st							R5	R4	R3	R2	R1	R0	G5	G4	G3	G2	G1	G0	B5	B4	B3	B2	B1	B0
16 bits (565 format)	1st									R5	R4	R3	R2	R1	G5	G4	G3	G2	G1	G0	B5	B4	B3	B2	B1
16 bits	1st									R5	R4	R3	R2	R1	R0	X	X	G5	G4	G3	G2	G1	G0	X	X
	2nd									B5	B4	B3	B2	B1	B0	X	X	R5	R4	R3	R2	R1	R0	X	X
	3rd									G5	G4	G3	G2	G1	G0	X	X	B5	B4	B3	B2	B1	B0	X	X
9 bits	1st																R5	R4	R3	R2	R1	R0	G5	G4	G3
	2nd																G2	G1	G0	B5	B4	B3	B2	B1	B0
8 bits	1st																	R5	R4	R3	R2	R1	R0	X	X
	2nd																	G5	G4	G3	G2	G1	G0	X	X
	3rd																	B5	B4	B3	B2	B1	B0	X	X

X: Don't Care

6.2 Register Depiction

Please consult the spec of SSD1963

6. Optical Characteristics

Ta=25±2℃, ILED=20mA

Item		Symbol	Condition	Min.	Typ.	Max.	Unit	Remark
Response time		Tr	θ =0°、Φ=0°	-	10		ms	Note 3,5
		Tf		-	15		ms	
Contrast ratio		CR	At optimized viewing angle	300	400	-	-	Note 4,5
Color Chromaticity	White	Wx	θ =0°、Φ=0	(0.26)	(0.31)	(0.36)		Note 2,6,7
		Wy		(0.28)	(0.33)	(0.38)		
	Red	Rx	θ =0°、Φ=0					
		Ry						
	Green	Gx	θ =0°、Φ=0					
		Gy						
	Blue	Bx	θ =0°、Φ=0					
		By						
Viewing angle	Hor.	ΘR	CR≧10	(50)	(60)		Deg.	Note 1
		ΘL		(50)	(60)			
	Ver.	ΦT		(40)	(50)			
		ΦB		(45)	(55)			
Brightness		-	-	200	250	-	cd/m²	Center of display

Ta=25±2℃, I_L=20mA

Note 1: Definition of viewing angle range

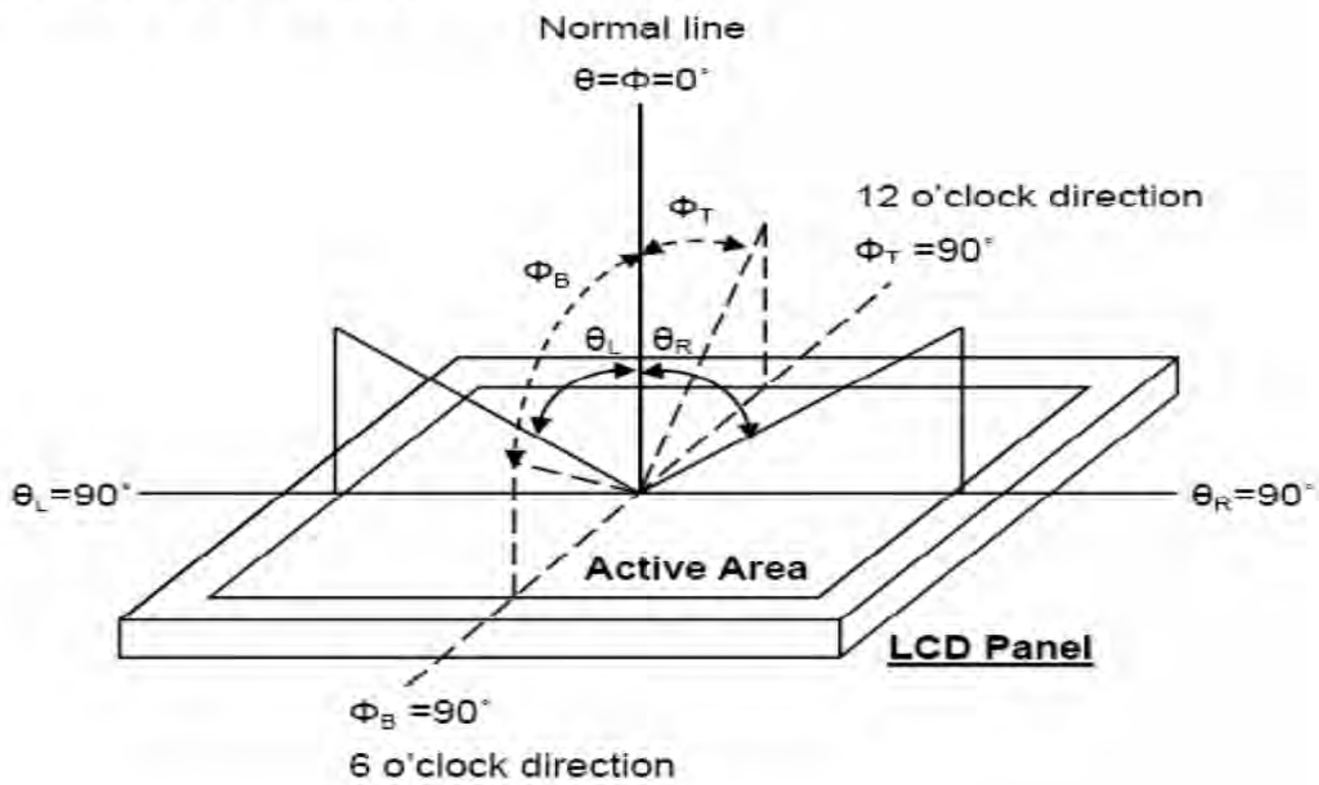

Fig. 8-1 Definition of viewing angle

Note 2: Test equipment setup:

After stabilizing and leaving the panel alone at a driven temperature for 10 minutes, the measurement should be executed. Measurement should be executed in a stable, windless, and dark room. Optical specifications are measured by Topcon BM-7 luminance meter 1.0° field of view at a distance of 50cm and normal direction.

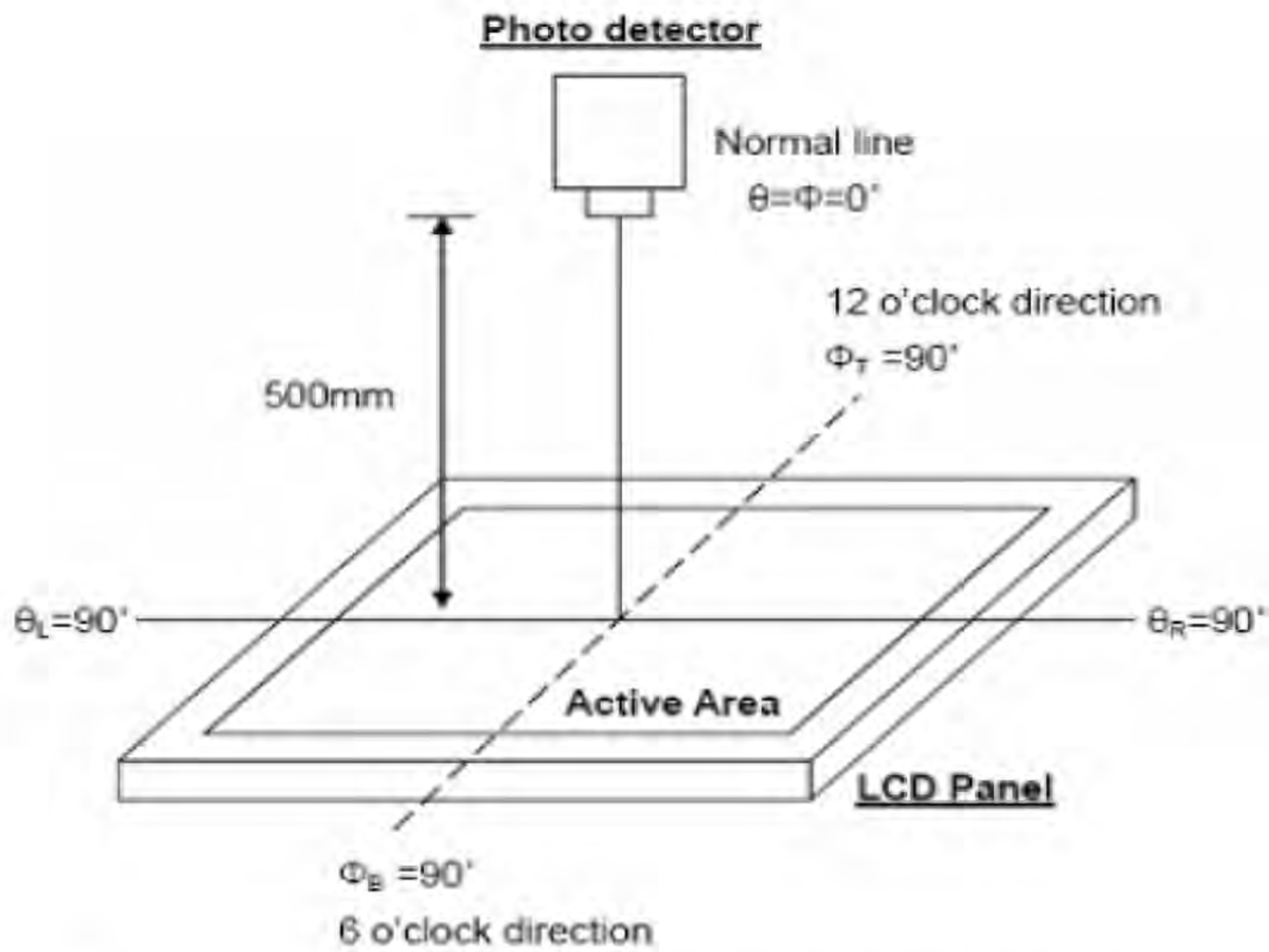

Fig. 8-2 Optical measurement system setup

Note 3: Definition of Response time:

The response time is defined as the LCD optical switching time interval between "White" state and "Black" state. Rise time, Tr, is the time between photo detector output intensity changed from 90% to 10% . And fall time, Tf, is the time between photo detector output intensity changed from10% to 90% .

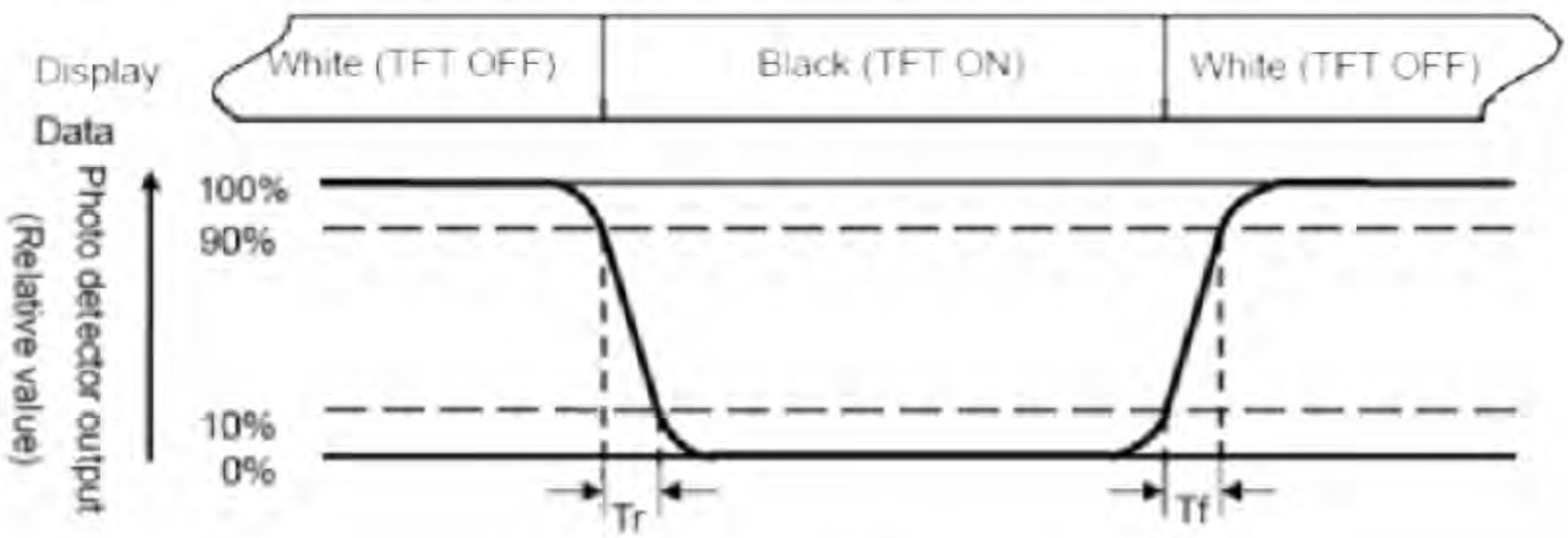

Definition of response time

Note 4: Definition of contrast ratio:

The contrast ratio is defined as the following expression.

$$\text{Contrast ratio (CR)} = \frac{\text{Luminance measured when LCD on the "White" state}}{\text{Luminance measured when LCD on the "Black" state}}$$

Note 5: White Vi = Vi50 ± 1.5V

Black Vi = Vi50 ± 2.0V

"±" means that the analog input signal swings in phase with VCOM signal.

"±" means that the analog input signal swings out of phase with VCOM signal.

The 100% transmission is defined as the transmission of LCD panel when all the input terminals of module are electrically opened.

Note 6: Definition of color chromaticity (CIE 1931)

Color coordinates measured at the center point of LCD

Note 7: Measured at the center area of the panel when all the input terminals of LCD panel are electrically opened.

$$\text{Note 8 : Uniformity (U)} = \frac{\text{Brightness (min)}}{\text{Brightness (max)}} \times 100\%$$

7. Absolute Maximum Ratings

Item	Symbol	Min	Typ	Max	Unit
Operating Temperature	T_{OP}	-20	—	+70	℃
Storage Temperature	T_{ST}	-30	—	+80	℃
Power Supply Voltage	V_{GH}	-0.3	—	18	V
	V_{GL}	-15	—	0.3	V
	VCC	-0.3	—	6.0	V

8. Electrical Characteristics

Item	Symbol	Condition	Min	Typ	Max	Unit
Supply Voltage For Logic	VCC	—	3.0	3.3	3.6	V
Input High Volt.	V_{IH}	—	0.8VDDIO	—	VDDIO + 0.5	V
Input Low Volt.	V_{IL}	—	—	—	0.2VDDIO	V
LCD Driving Supply Voltage	V_{GH} *1	Ta=25℃		15		V *3
	V_{GL}*2			-10		V
	Vcom		—	3.7	—	
Supply Current	I_{VDD}	V_{DD}=3.3V	—	121	—	mA

Notes:

*1) VGH is TFT Gate on operating Voltage.

*2) VGL is TFT Gate off operating Voltage, VGL signal must be fluctuates with same phase as Vcom when Storage on Gate structure.

*3) Vcom must be adjusted to optimize display quality_Crosstalk,Contrast Ratio and etc.

■ DC CHARATERISTICS

Conditions:

Voltage referenced to VSS

VDDD, VDDPLL = 1.2V

VDDIO, VDDLCD = 3.3V

TA = 25°C

DC Characteristics

Symbol	Parameter	Test Condition	Min	Typ	Max	Unit
PSTY	Quiescent Power			300		uW
IIZ	Input leakage current		-1		1	uA
IOZ	Output leakage current		-1		1	uA
VOH	Output high voltage		0.8VDDIO			V
VOL	Output low voltage				0.2VDDIO	V
VIH	Input high voltage		0.8VDDIO		VDDIO + 0.5	V
VIL	Input low voltage				0.2VDDIO	V

■ AC Characteristics

Conditions:

Voltage referenced to V_{SS}

V_{DDD}, V_{DDPLL} = 1.2V

V_{DDIO}, V_{DDLCD} = 3.3V

T_A = 25 C

C_L = 50pF (Bus/CPU Interface)

C_L = 0pF (LCD Panel Interface)

9.1Clock Timing

Clock Input Requirements for CLK (PLL-bypass)

Symbol	Parameter	Min	Max	Units
FCLK	Input Clock Frequency (CLK)		120	MHz
TCLK	Input Clock period (CLK)	1/fCLK		ns

Clock Input Requirements for CLK (Using PLL)

Symbol	Parameter	Min	Max	Units
FCLK	Input Clock Frequency (CLK)	2.5	50	MHz
TCLK	Input Clock period (CLK)	1/fCLK		ns

Clock Input Requirements for crystal oscillator XTAL (Using PLL)

Symbol	Parameter	Min	Max	Units
FXTAL	Input Clock Frequency	2.5	10	MHz
TXTAL	Input Clock period	1/fXTAL		ns

9.2 MCU Interface Timing

9.2.1 6800 Mode

6800 Mode Timing

Symbol	Parameter	Min	Typ	Max	Unit
tcyc	Reference Clock Cycle Time	9	-	-	ns
tPWCSL	Pulse width CS# or E low	1	-	-	tCYC
tPWCSH	Pulse width CS# or E high	1	-	-	tCYC
tFDRD	First Data Read Delay	5	-	-	tCYC
tAS	Address Setup Time	1	-	-	ns
tAH	Address Hold Time	1	-	-	ns
tDSW	Data Setup Time	4	-	-	ns
tDHW	Data Hold Time	1	-	-	ns
tDSR	Data Access Time	-	-	5	ns
tDHR	Output Hold time	1	-	-	ns

Figure9-1: 6800 Mode Timing Diagram (Use CS# as Clock)

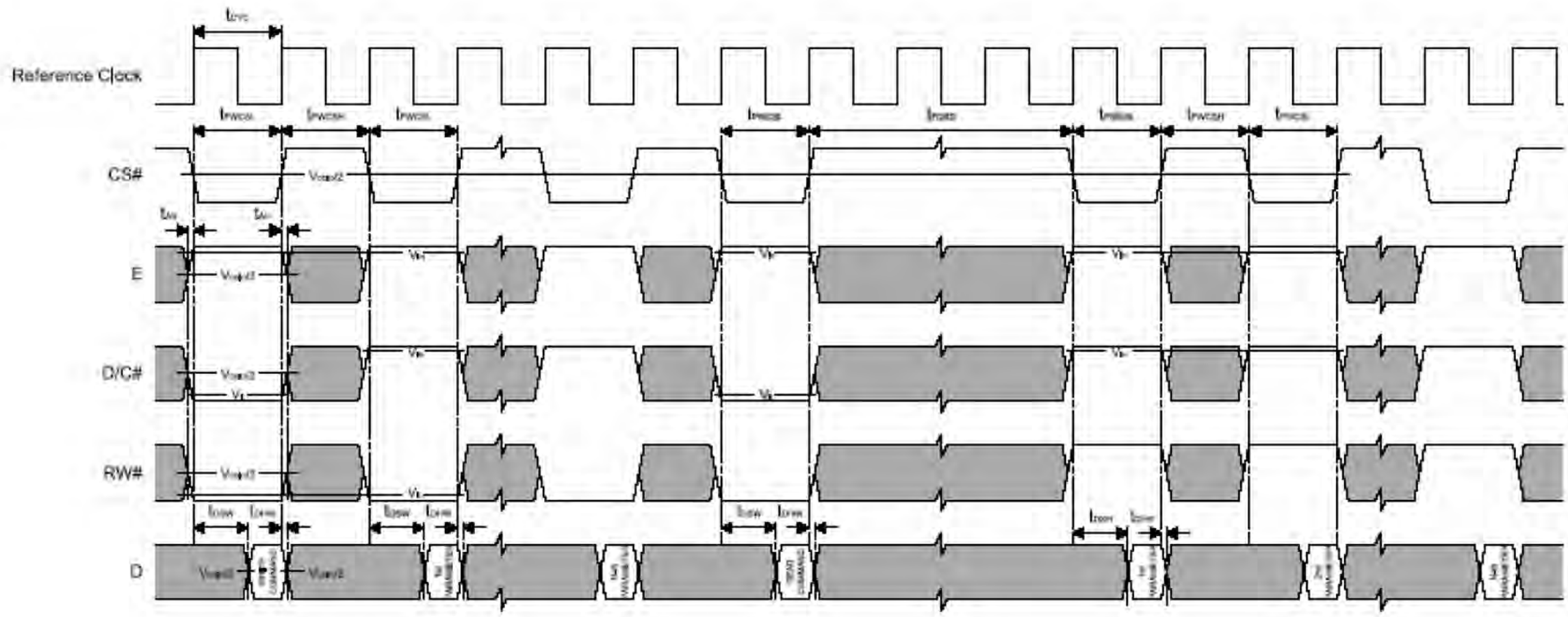

Figure 9-2: 6800 Mode Timing Diagram (Use E as Clock)

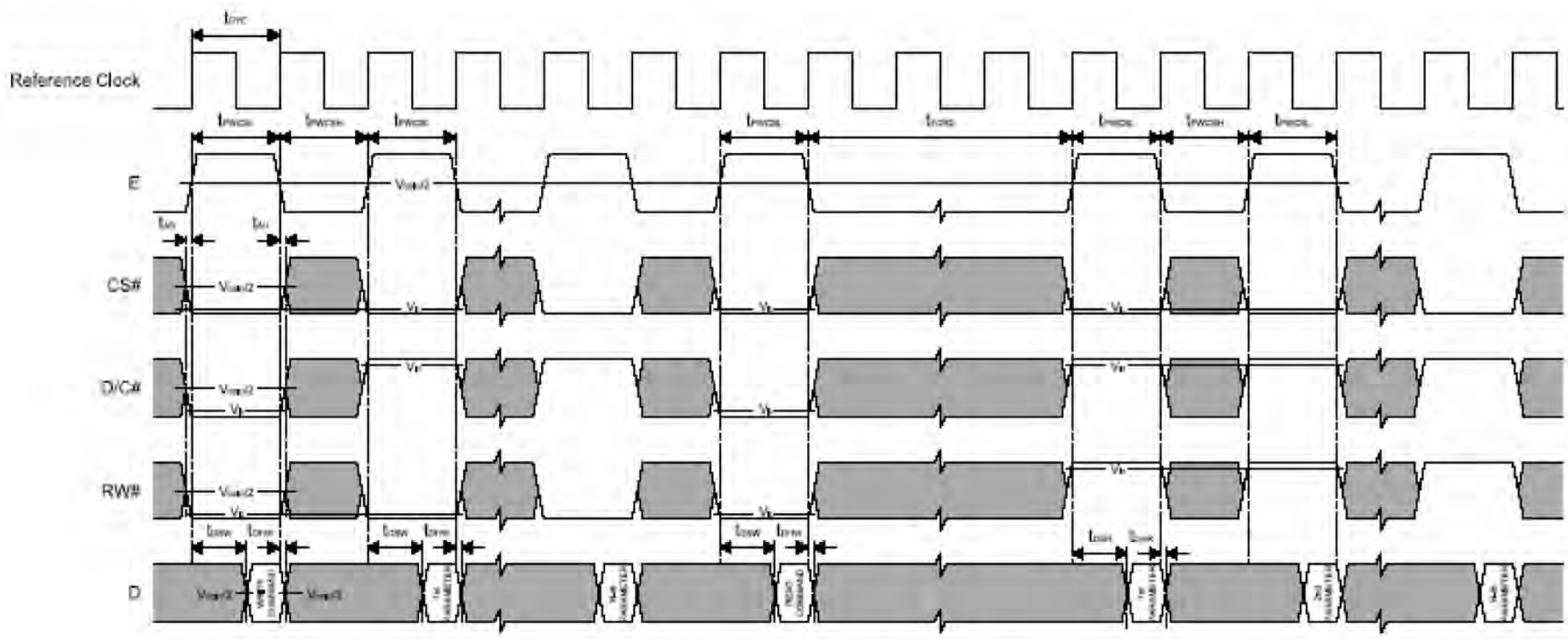

9.2.2 8080 Mode Write Cycle

Table 9-5: 8080 Mode Timing

Symbol	Parameter	Min	Typ	Max	Unit
tcyc	Reference Clock Cycle Time	9	-	-	ns
tPWCSL	Pulse width CS# low	1	-	-	tCYC
tPWCSH	Pulse width CS# high	1	-	-	tCYC
tFDRD	First Read Data Delay	5	-	-	tCYC
tAS	Address Setup Time	1	-	-	ns
tAH	Address Hold Time	1	-	-	ns
tDSW	Data Setup Time	4	-	-	ns
tDHW	Data Hold Time	1	-	-	ns
tDSR	Data Access Time	-	-	5	ns
tDHR	Output Hold time	1	-	-	ns

Figure9-3: 8080 Mode Timing Diagram

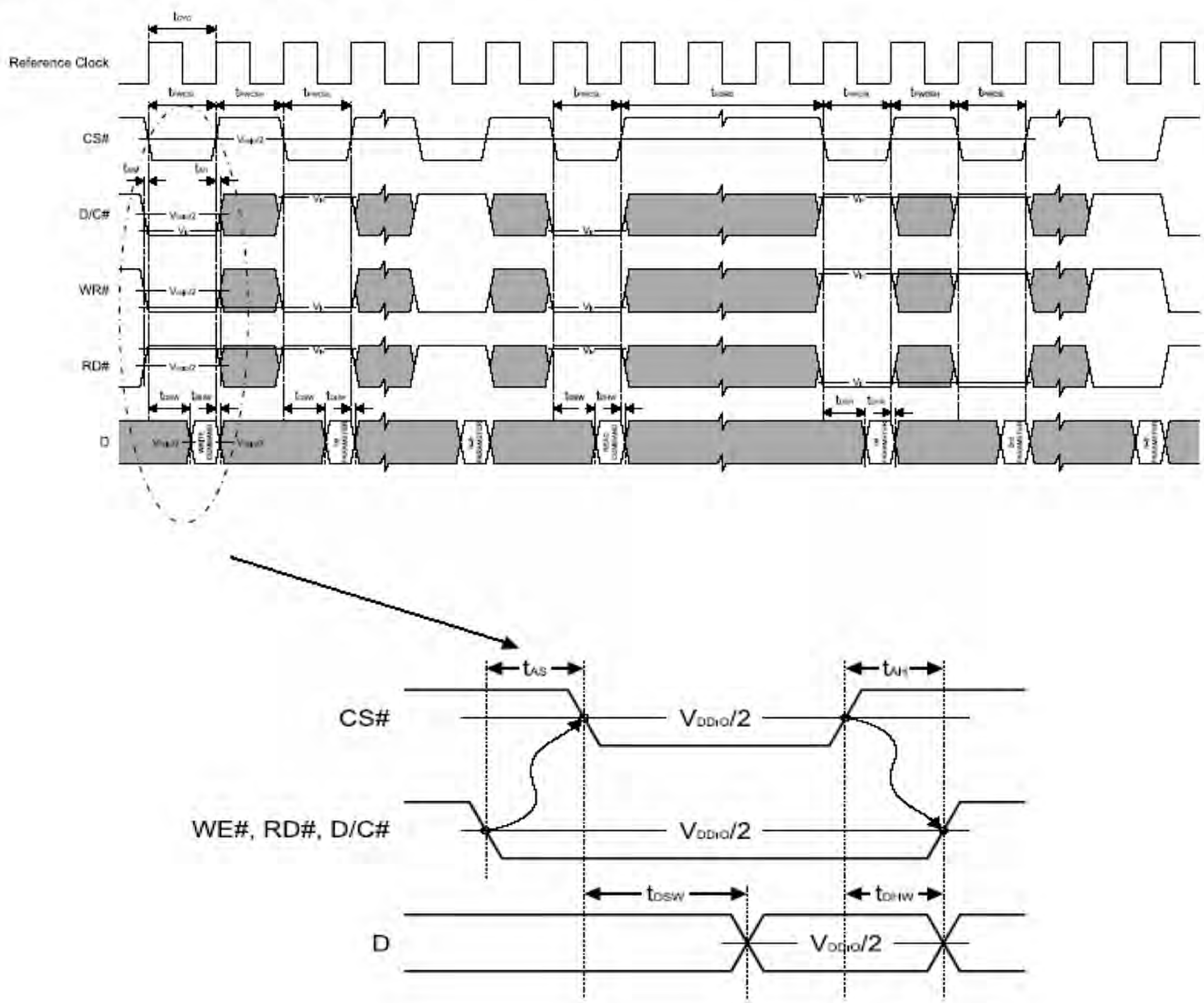

9. Backlight Information

Parameter	Symbol	Min.	Typ.	Max.	Unit	Remark
LED Current	I_{LED}	----	140	210	mA	Note1
LED voltage	V_{LED}	9.0	10.2	10.5	V	
LED life Time	-	(10,000)	----	----	-	Note 2,3
Luminous Intensity	IV	----	300	----	CD/M^2	Note 4

Note 1: There are 7 Groups LED shown as below, =9.9 V(Min)

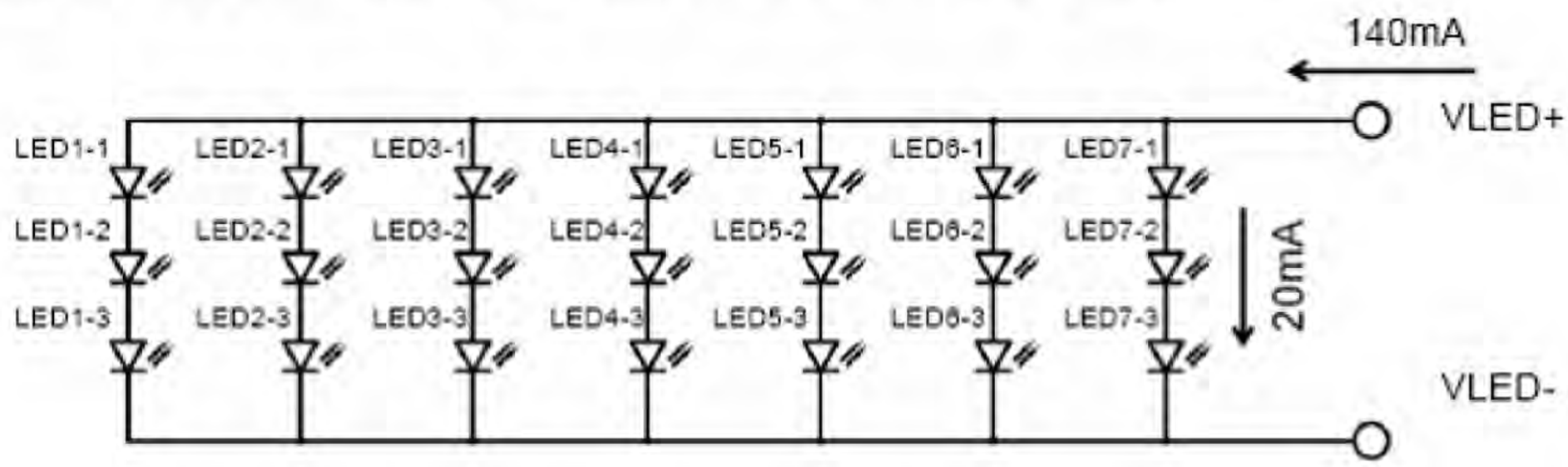

Note 2 : Ta = 25℃ ,
Note 3 : Brightess to be decreased to 50% of the initial value.

Note 4: The luminous is measured through LCD panel.

10. Touch panel Information

PIN	OUT
1	X1
2	Y1
3	X2
4	Y2

PIN1-PIN3	200ohm-900ohm
PIN2-PIN4	200ohm-900ohm

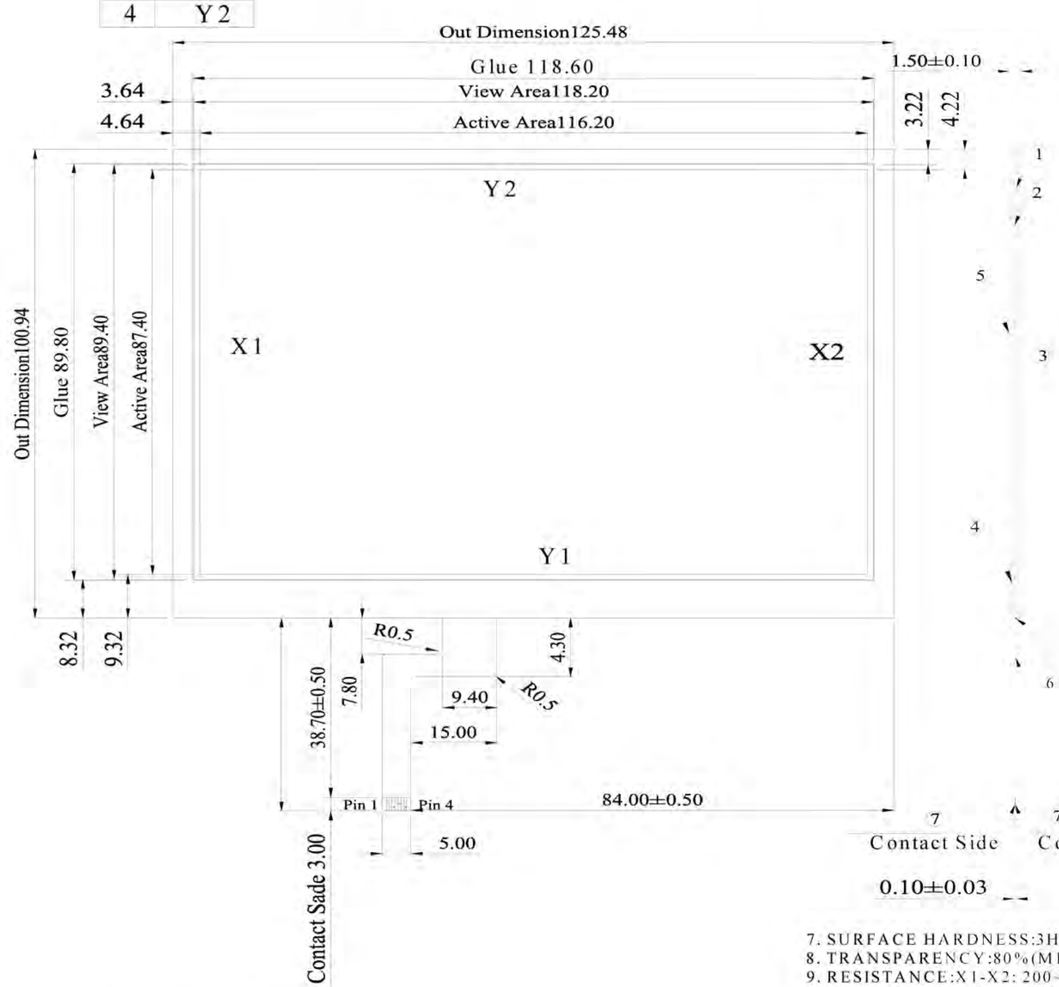

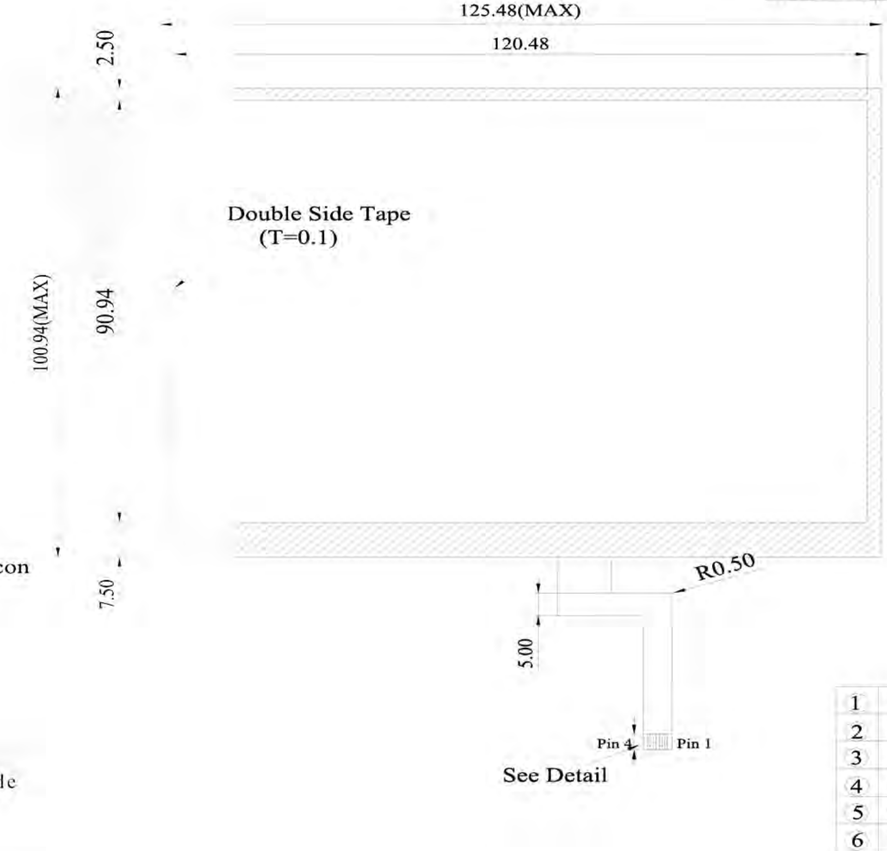

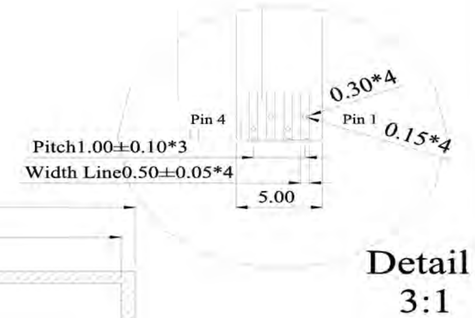

1	1.10mm ITO Glass
2	Spacer DOT
3	Double-faced adhesive
4	Adhesive
5	0.188mm ITO Film/Anti Glare
6	FPC Tail
7	Contact Side

NOTES:
1. TOUCH PANEL TYPE:ANALOG RESISTANCE,4 LINES;
2. FILM MATERIAL: SINGLE-LAYER FILM WITH ANTI-GLARE;
3. OPERATION VOLTAGE: DC 7V(MAX);
4. INPUT MODE: PEN OR FINGER,80g(MIN);
5. LINEARITY:1.5%MAX;
6. RESPONSE TIME: 10ms(MAX);
7. SURFACE HARDNESS:3H (MIN) :
8. TRANSPARENCY:80%(MIN);
9. RESISTANCE:X1-X2: 200~900 ΓTXT.SHX::
Y1-Y2: 200~900 ΓTXT.SHX;;
10. INSURANCE RESISTANCE: 20M XT.SHX:MIN. (DC 25V):
11. LIFE TIME: 1000000 TIMES(MIN);
12. OPERATION TEMPERATURE: -20~70~P STORAGE TEMPERATURE: -30~80~P13. UNMARKED TOLERANCE: @0.2:
14. REFERENCE DIMENSION:( );
15. REQUIREMENTS ON ENVIRONMENTAL PROTECTION:ROHS.

11. Inspection specification

<table>
<tr><th>NO</th><th>Item</th><th>Criterion</th><th>AQL</th></tr>
<tr><td>01</td><td>Electrical Testing</td><td>1.1 Missing vertical, horizontal segment, segment contrast defect.
1.2 Missing character, dot or icon.
1.3 Display malfunction.
1.4 No function or no display.
1.5 Current consumption exceeds product specifications.
1.6 LCD viewing angle defect.
1.7 Mixed product types.
1.8 Contrast defect.</td><td>0.65</td></tr>
<tr><td>02</td><td>Black or white spots on LCD (display only)</td><td>2.1 White and black spots on display ≦0.25mm, no more than three white or black spots present.
2.2 Densely spaced: No more than two spots or lines within 3mm</td><td>2.5</td></tr>
<tr><td rowspan="2">03</td><td rowspan="2">LCD black spots, white spots, contamination (non-display)</td><td>3.1 Round type : As following drawing
Φ=(x + y) / 2</td><td>2.5</td></tr>
<tr><td>3.2 Line type : (As following drawing)
 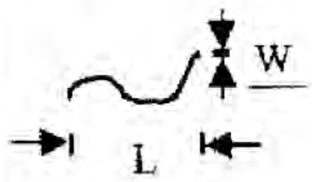

<table>
<tr><th>Length</th><th>Width</th><th>Acceptable Q TY</th></tr>
<tr><td>---</td><td>W≦0.02</td><td>Accept no dense</td></tr>
<tr><td>L≦3.0</td><td>0.02＜W≦0.03</td><td rowspan="2">2</td></tr>
<tr><td>L≦2.5</td><td>0.03＜W≦0.05</td></tr>
<tr><td>---</td><td>0.05＜W</td><td>As round type</td></tr>
</table></td><td>2.5</td></tr>
<tr><td>04</td><td>Polarizer bubbles</td><td>If bubbles are visible, judge using black spot specifications, not easy to find, must check in specify direction.
<table>
<tr><th>Size Φ</th><th>Acceptable Q TY</th></tr>
<tr><td>Φ≦0.20</td><td>Accept no dense</td></tr>
<tr><td>0.20＜Φ≦0.50</td><td>3</td></tr>
<tr><td>0.50＜Φ≦1.00</td><td>2</td></tr>
<tr><td>1.00＜Φ</td><td>0</td></tr>
<tr><td>Total Q TY</td><td>3</td></tr>
</table></td><td>2.5</td></tr>
</table>

<table>
<tr><th>NO</th><th>Item</th><th>Criterion</th><th>AQL</th></tr>
<tr><td>05</td><td>Scratches</td><td>Follow NO.3 LCD black spots, white spots, contamination</td><td></td></tr>
<tr><td>06</td><td>Chipped glass</td><td>
Symbols Define:
x: Chip length y: Chip width z: Chip thickness
k: Seal width t: Glass thickness a: LCD side length
L: Electrode pad length:

6.1 General glass chip :
6.1.1 Chip on panel surface and crack between panels:
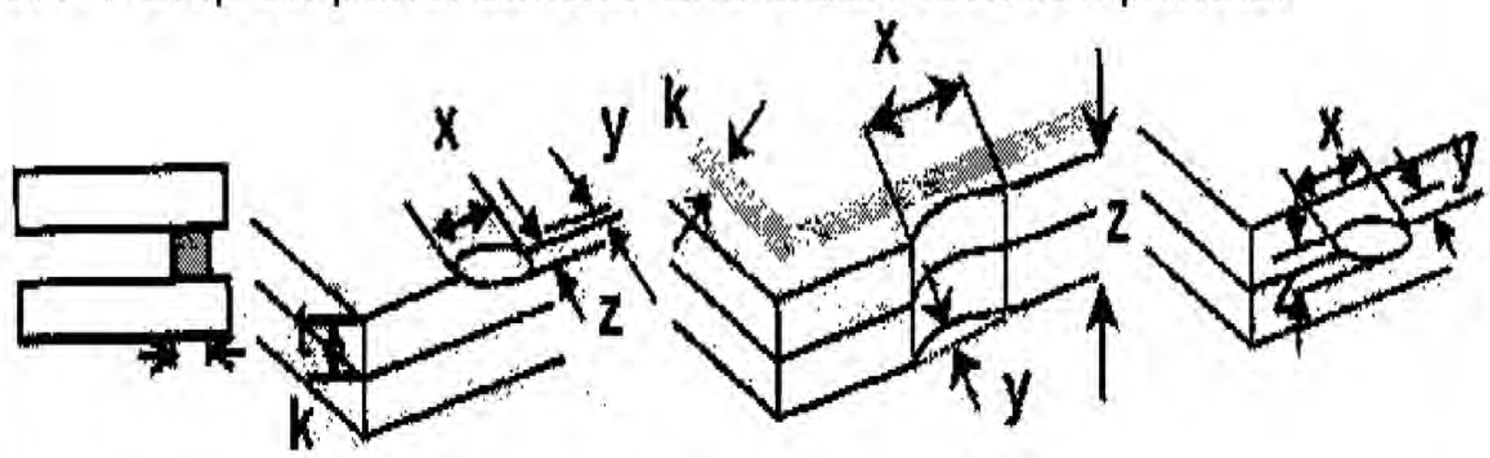

<table>
<tr><th>z: Chip thickness</th><th>y: Chip width</th><th>x: Chip length</th></tr>
<tr><td>Z≦1/2t</td><td>Not over viewing area</td><td>x≦1/8a</td></tr>
<tr><td>1/2t＜z≦2t</td><td>Not exceed 1/3k</td><td>x≦1/8a</td></tr>
</table>
⊙If there are 2 or more chips, x is total length of each chip.

6.1.2 Corner crack:
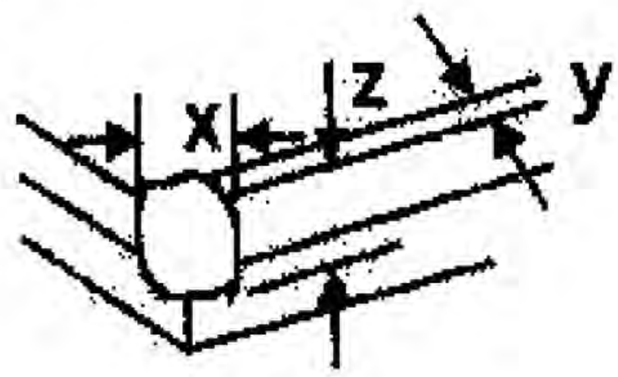

<table>
<tr><th>z: Chip thickness</th><th>y: Chip width</th><th>x: Chip length</th></tr>
<tr><td>Z≦1/2t</td><td>Not over viewing area</td><td>x≦1/8a</td></tr>
<tr><td>1/2t＜z≦2t</td><td>Not exceed 1/3k</td><td>x≦1/8a</td></tr>
</table>
⊙If there are 2 or more chips, x is the total length of each chip.
</td><td>2.5</td></tr>
</table>

NO	Item	Criterion	AQL
06	Glass crack	Symbols : x: Chip length y: Chip width z: Chip thickness k: Seal width t: Glass thickness a: LCD side length L: Electrode pad length 6.2 Protrusion over terminal : 6.2.1 Chip on electrode pad :	2.5

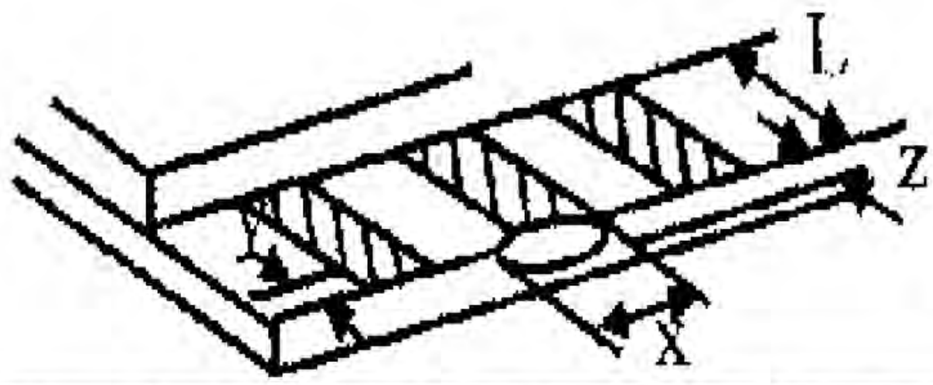

y: Chip width	x: Chip length	z: Chip thickness
y≦0.5mm	x≦1/8a	0 ＜ z ≦ t

6.2.2 Non-conductive portion:

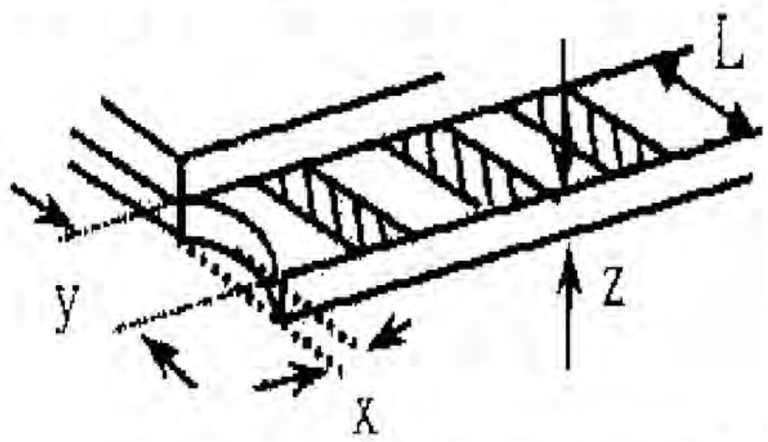

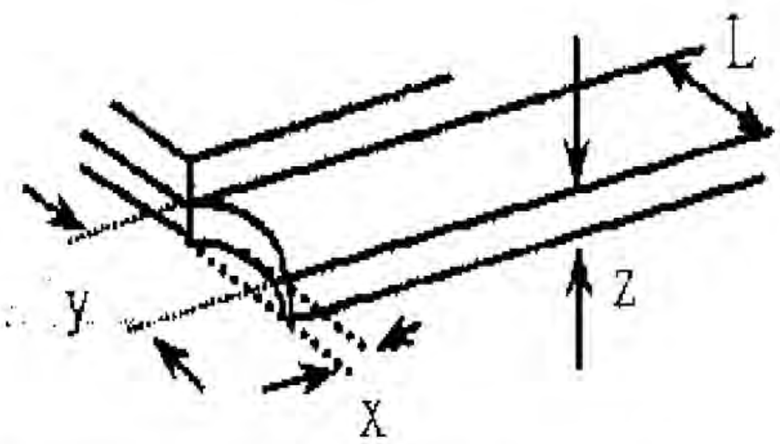

y: Chip width	x: Chip length	z: Chip thickness
y≦ L	x≦1/8a	0 ＜ z ≦ t

⊙If the chipped area touches the ITO terminal, over 2/3 of the ITO must remain and be inspected according to electrode terminal specifications.

⊙If the product will be heat sealed by the customer, the alignment mark not be damaged.

6.2.3 Substrate protuberance and internal crack.

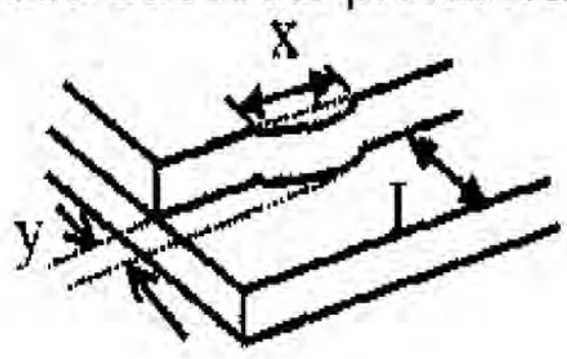

y: width	x: length
y≦1/3L	x ≦ a

NO	Item	Criterion	AQL
07	Cracked glass	The LCD with extensive crack is not acceptable.	2.5
08	Backlight elements	8.1 Illumination source flickers when lit. 8.2 Spots or scratched that appear when lit must be judged. Using LCD spot, lines and contamination standards. 8.3 Backlight doesn't light or color wrong.	0.65 2.5 0.65
09	Bezel	9.1 Bezel may not have rust, be deformed or have fingerprints, stains or other contamination. 9.2 Bezel must comply with job specifications.	2.5 0.65
10	PCB、COB	10.1 COB seal may not have pinholes larger than 0.2mm or contamination. 10.2 COB seal surface may not have pinholes through to the IC. 10.3 The height of the COB should not exceed the height indicated in the assembly diagram. 10.4 There may not be more than 2mm of sealant outside the seal area on the PCB. And there should be no more than three places. 10.5 No oxidation or contamination PCB terminals. 10.6 Parts on PCB must be the same as on the production characteristic chart. There should be no wrong parts, missing parts or excess parts. 10.7 The jumper on the PCB should conform to the product characteristic chart. 10.8 If solder gets on bezel tab pads, LED pad, zebra pad or screw hold pad, make sure it is smoothed down. 10.9 The Scraping testing standard for Copper Coating of PCB **X * Y<=2mm²**	2.5 2.5 0.65 2.5 2.5 0.65 0.65 2.5 2.5
11	Soldering	11.1 No un-melted solder paste may be present on the PCB. 11.2 No cold solder joints, missing solder connections, oxidation or icicle. 11.3 No residue or solder balls on PCB. 11.4 No short circuits in components on PCB.	2.5 2.5 2.5 0.65

NO	Item	Criterion	AQL
12	General appearance	12.1 No oxidation, contamination, curves or, bends on interface Pin (OLB) of TCP.	2.5
		12.2 No cracks on interface pin (OLB) of TCP.	0.65
		12.3 No contamination, solder residue or solder balls on product.	2.5
		12.4 The IC on the TCP may not be damaged, circuits.	2.5
		12.5 The uppermost edge of the protective strip on the interface pin must be present or look as if it causes the interface pin to sever.	2.5
		12.6 The residual rosin or tin oil of soldering (component or chip component) is not burned into brown or black color.	2.5
		12.7 Sealant on top of the ITO circuit has not hardened.	0.65
		12.8 Pin type must match type in specification sheet.	0.65
		12.9 LCD pin loose or missing pins.	0.65
		12.10 Product packaging must the same as specified on packaging specification sheet.	0.65
		12.11 Product dimension and structure must conform to product specification sheet.	

12. Precautions in use of LCD Modules

1. Avoid applying excessive shocks to the module or making any alterations or modifications to it.
2. Don’t make extra holes on the printed circuit board, modify its shape or change the components of LCD module.
3. Don’t disassemble the LCM.
4. Don’t operate it above the absolute maximum rating.
5. Don’t drop, bend or twist LCM.
6. Soldering: only to the I/O terminals.
7. Storage: please storage in anti-static electricity container and clean environment.

13. Material List of Components for RoHs

1. We hereby declares that all of or part of products, including, but not limited to, the LCM, accessories or packages, manufactured and/or delivered to your company (including your subsidiaries and affiliated company) directly or indirectly by our company (including our subsidiaries or affiliated companies) do not intentionally contain any of the substances listed in all applicable EU directives and regulations, including the following substances.

   Exhibit A：The Harmful Material List

Material	(Cd)	(Pb)	(Hg)	(Cr6+)	PBBs	PBDEs
Limited Value	100 ppm	1000 ppm	1000 ppm	1000 ppm	1000 ppm	1000 ppm
Above limited value is set up according to RoHS.						

2. Process for RoHS requirement：
   (1) Use the Sn/Ag/Cu soldering surface；the surface of Pb-free solder is rougher than we used before.
   (2) Heat-resistance temp.：
   Reflow：250℃, 30 seconds Max.；
   Connector soldering wave or hand soldering：320℃, 10 seconds max.
   (3) Temp. curve of reflow, max. Temp.：235±5℃；
   Recommended customer's soldering temp. of connector：280℃, 3 seconds.

LCM Sample Estimate Feedback Sheet

Module Number： _____

1、Panel Specification：		
1. Panel Type：	□ Pass	□ NG ,_____
2. View Direction：	□ Pass	□ NG ,_____
3. Numbers of Dots：	□ Pass	□ NG ,_____
4. View Area：	□ Pass	□ NG ,_____
5. Active Area：	□ Pass	□ NG ,_____
6.Operating Temperature：	□ Pass	□ NG ,_____
7.Storage Temperature：	□ Pass	□ NG ,_____
8.Others：_____		
2、Mechanical Specification：		
1. PCB Size：	□ Pass	□ NG ,_____
2.Frame Size：	□ Pass	□ NG ,_____
3.Materal of Frame：	□ Pass	□ NG ,_____
4.Connector Position：	□ Pass	□ NG ,_____
5.Fix Hole Position：	□ Pass	□ NG ,_____
6.Backlight Position：	□ Pass	□ NG ,_____
7. Thickness of PCB：	□ Pass	□ NG ,_____
8. Height of Frame to PCB：	□ Pass	□ NG ,_____
9.Height of Module：	□ Pass	□ NG ,_____
10.Others：	□ Pass	□ NG ,_____
3、Relative Hole Size：		
1.Pitch of Connector：	□ Pass	□ NG ,_____
2.Hole size of Connector：	□ Pass	□ NG ,_____
3.Mounting Hole size：	□ Pass	□ NG ,_____
4.Mounting Hole Type：	□ Pass	□ NG ,_____
5.Others：	□ Pass	□ NG ,_____
4、Backlight Specification：		
1.B/L Type：	□ Pass	□ NG ,_____
2.B/L Color：	□ Pass	□ NG ,_____
3.B/L Driving Voltage (Reference for LED Type)： □ Pass □ NG ,_____		
4.B/L Driving Current：	□ Pass	□ NG ,_____
5.Brightness of B/L：	□ Pass	□ NG ,_____
6.B/L Solder Method：	□ Pass	□ NG ,_____
7.Others：	□ Pass	□ NG ,_____

>> **Go to page 2** <<

Module Number：_____

5、Electronic Characteristics of Module：

1.Input Voltage：	□ Pass	□ NG ,_____
2.Supply Current：	□ Pass	□ NG ,_____
3.Driving Voltage for LCD：	□ Pass	□ NG ,_____
4.Contrast for LCD：	□ Pass	□ NG ,_____
5.B/L Driving Method：	□ Pass	□ NG ,_____
6.Negative Voltage Output：	□ Pass	□ NG ,_____
7.Interface Function：	□ Pass	□ NG ,_____
8.LCD Uniformity：	□ Pass	□ NG ,_____
9.ESD test：	□ Pass	□ NG ,_____
10.Others：	□ Pass	□ NG ,_____

6、Summary：

Sales signature：_____

Customer Signature：_____ **Date**： / /